RoHS

REV.	ECN.#	DESCRIPTION	NAME	DATE
A0	————	NEW RELEASE	HZP	2023.01.02

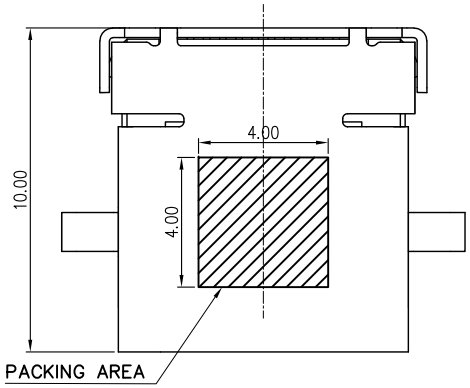

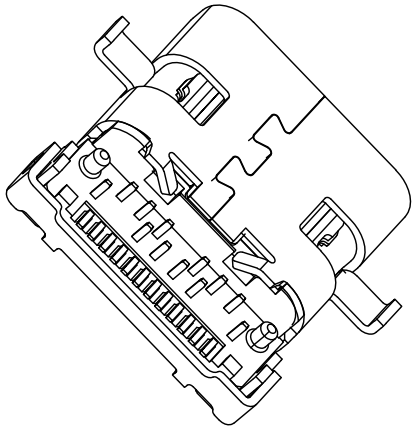

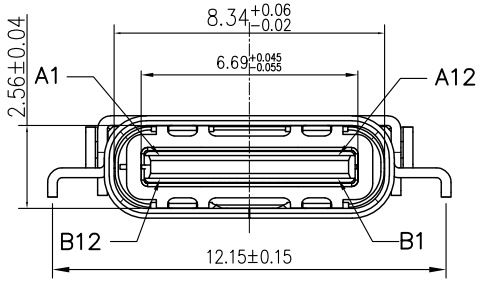

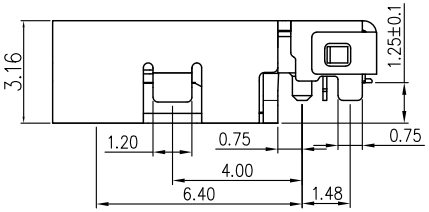

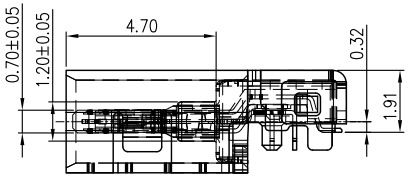

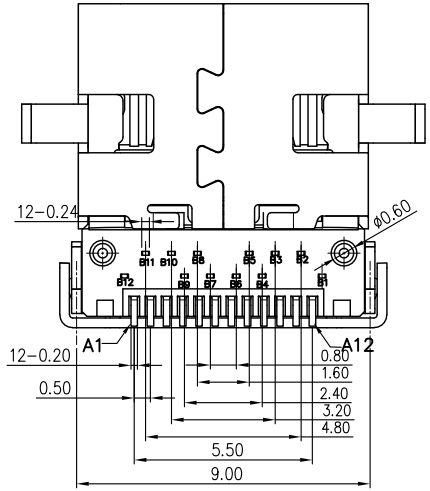

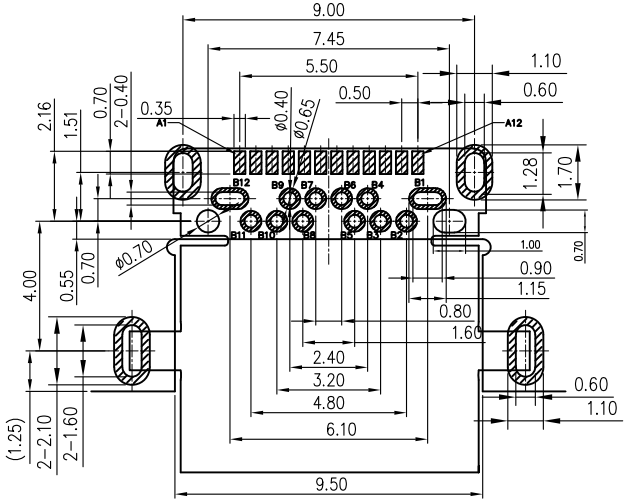

RECOMMENDED PCB LAYOUT

TOLERANCE=±0.05

NOTES:
1. MATERIAL:
   1.1 HOUSING: LCP; COLOR: BLACK
   1.2 TERMINAL: C7025
   1.3 SHELL: SUS304
   1.4 MID PLATE: SUS301
2. FINISH:
   2.1 TERMINAL: G/F PLATED ON CONTACT AREA;
   G/F PLATED ON SOLDER AREA;
   Ni 30u" MIN. UNDERPLATED OVERALL.
   2.2 SHELL: Ni 30u" MIN. PLATED OVERALL
   2.3 MID PLATE: CLEANING.
3. ELECTRICAL SPECIFICATION:
   3.1 RATED CURRENT: VBUS AND GND PIN 5.0A;
   Other pin 0.25A
   3.2 CONTACT RESISTANCE: 40mΩ MAX(INITIAL). 50mΩ MAX (AFTER).
   3.3 INSULATION RESISTANCE: 100MΩ MIN.
   3.4 DIELECTRIC WITHSTANDING VOLTAGE: 100V AC R.M.S.
4. MACHINERY SPECIFICATION:
   4.1 MATING FORCE: 5N~20N.
   UNMATING FORCE: 8N~20N. (AFTER TEST: 6N~20N).
   4.2 DURABILITY: 10000 CYCLES MIN.
5. ENVIRONMENTAL SPECIFICATION
   5.1 OPERATING CONDITION: TEMPERATURE−30℃~+85℃;
   HUMIDITY 80% R.H MAX
   5.2 SALT SPRAY: 24H
6. SOLDER ABILITY: 245±5℃, 5±0.5s
7. IR REFLOW: THE PEAK TEMPERATURE ON THE BOARD SHALL BE MAINTAINED FOR 10 SECONDS AT 260℃.

PIN NUMBER	SIGNAL NAME
A1	GND
A2	SSTXp1
A3	SSTXn1
A4	VBUS
A5	CC1
A6	Dp1
A7	Dn1
A8	SBU1
A9	VBUS
A10	SSRXn2
A11	SSRXp2
A12	GND

PIN NUMBER	SIGNAL NAME
B12	GND
B11	SSRXp1
B10	SSRXn1
B9	VBUS
B8	SBU2
B7	Dn2
B6	Dp2
B5	CC2
B4	VBUS
B3	SSTXn2
B2	SSTXp2
B1	GND

MILLIMETERS	INCH
X.° ±2°	X.° ±2°
.X ±0.30	.X ±0.012
.XX ±0.20	.XX ±0.008
.XXX ±0.10	.XXX ±0.004

THESE DRAWINGS AND SPECIFICATIONS ARE THE PROPERTY OF DongGuan JinBiLai Metal Plastic Technology Co.?Ltd
COPIED OR USED IN ANY MANNER WITHOUT THE PRIOR WRITTEN CONSENT OF DongGuan JinBiLai Metal Plastic Technology Co.,Ltd

东莞市金比莱五金塑胶科技有限公司
DONGGUAN JBL TECH CO., LTD

TITLE	TYPE C 24P前插后贴沉板1.25 CH0.32 L=10.00				DR	
PART NO.	1043114592				CHKD	
PRO J.	PAGE	1/2	UNITS	mm	APPD	
	SIZE	A4	SCALE	1:1	DIS NO.	