www.dzyjzj.com Tel:0755-27575531 Fax:0755-27576267

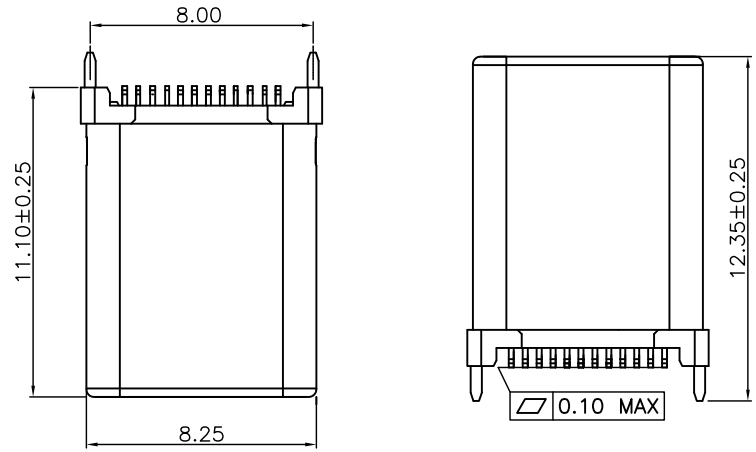

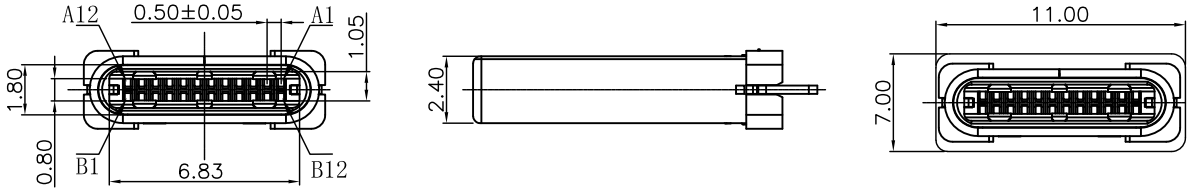

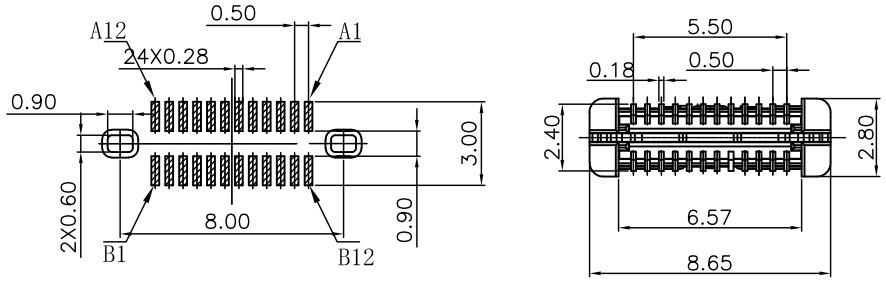

RECOMMENDED PCB LAYOUT(t=0.80±0.05)
COMPONENT SIDE(GENERAL TOLERANCE:±0.05)

NOTES:

1.MATERIAL:
- MOLDING: LCP UL94 V-0
- CONTACT:COPPER ALLOY.
  - GOLD PLATED ON CONTACT AREA, 60U''
  - Min TIN (LEAD FREE) ON SOLDER AREA,
- SHELL: SUS304-H,T=0.30±0.03mm
  - 50u" NICKEL PLATING OVER ALL.
- LATCH:SUS301-H,T=0.20±0.03mm
- SHILD:SUS304-H,T=0.12±0.03mm

2.MECHANICAL:
- INSERTION: 5~20N.
- EXTRACTION: 8~20N.
- DURABILITY: 10000 CYCLES

3.ELECTRICAL:
- CURRENT: 3A MIN FOR VBUS;
  - 0.25A MIN FOR OTHER.
- VOLTAGE: 5VAC MAX
- WITHSTANDING VOLTAGE: 100V AC.
- CONTACT RESISTANCE: 40mΩ MAX.
- INSULATION RESISTANCE: 100MΩ MIN.

4.ENVIRONMENTAL
- TEMPERATURE RANGE -40°C ~ +85°C

深圳市华宇创精密电子有限公司

TOLERANCE: X.X ±0.30, X.XX ±0.25, X.XXX ±0.15, X.° ±2°, X.X° ±0.5°	DRAWED BY: 陈一鸣	DATE: 2014-02-23	PART NAME: USB TYPE C 公座24P 立贴11.0H 无支撑脚
	CHECKED BY: 马跃	DATE: 2014-02-23	PART NO.: HYCW625-USBC24-110B
UNIT: mm [inch]			MOLD NO.:
	APPROVED BY: 邱敏	DATE: 2014-02-23	DRAW NO.: HYC-2511131105
SCALE:1:1 SIZE: A4			SHEET NO.: 1 OF 1