

防水圈图示



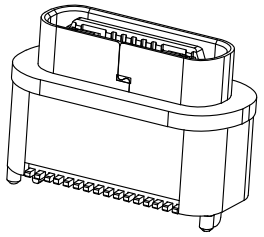

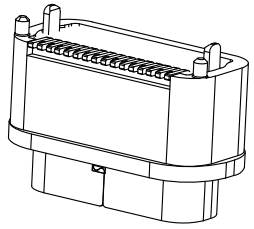

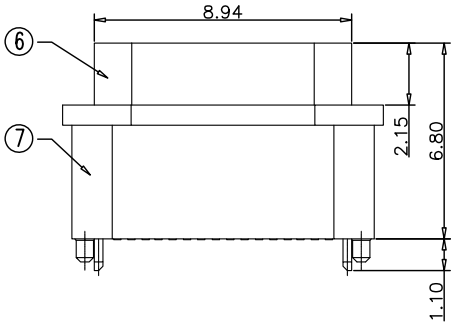

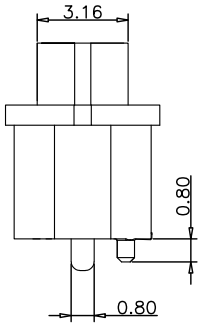

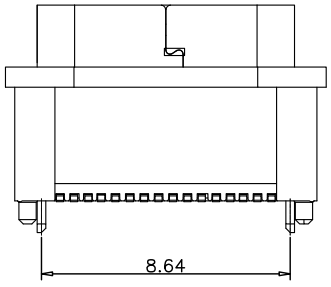

NOTES:

1.0. ELECTRICAL CHARACTERISTICS
1.1. LOW LEVEL CONTACT RESISTANCE:
40m ohm MAX FOR ALL CONTACT
50m ohm MAX AFTER ENMRINMENT TEST
1.2. DIELECTRIC WITHSTANDING VOLTAGE
100 VAC FOR 1 MINUTE SEA LEVEL
1.3. INSULATION RESISTANCE
100meg ohm MIN
1.4.CURRENT RATING
VBUS AND GND CONTACTS RATED AT 2.5A
EA. PARALLELED FOR A TOTAL OF 6A
2.0. MECHANICAL CHARACTERISTICS:
2.1. INSERTION FORCE:20N MAX
2.2. EXTRACTION FORCE 1−1000CYCES 8N MN.20 N MAX
EXTIRACTION FORCE 1001−10000 cYaES 6N MIN. 20 N MAX
2.3.DURABILTY :10,000craES
3.0OPERATING TEMPERATURE:−55℃TO +85℃

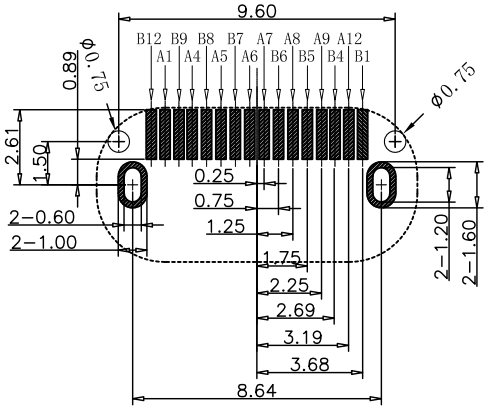

RECOMMEND P.C.B LAYOUT(COMPONENT SIDE)
TOLERANCE FOR PCB LAYOUT IS ±0.05

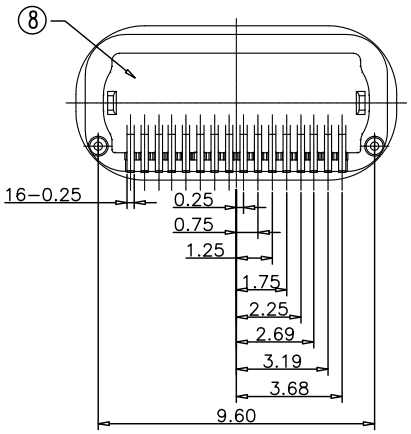

USB TYPE C PIN ASSIGNMENTS

PIN NUMBER	SIGNAL NAME	PIN NUMBER	SIGNAL NAME
A1	GND	B12	GND
A4	VBUS	B9	VBUS
A5	CC1	B8	SBU2
A6	DP1	B7	DN2
A7	DN1	B6	DP2
A8	SBU1	B5	CC2
A9	VBUS	B4	VBUS
A12	GND	B1	GND

TABLE:

NO	PART	Q'TY	Material
1	TOP TERMINAL	8	COPPER ALLOY/Au PLATED
2	BOTTOM TERMINAL	8	COPPER ALLOY/Au PLATED
3	MID PLATE	1	STAINLESS STEEL 清洗
4	MOLDING 1	1	THERMOPLASTIC PLASTICS
5	MOLDING 2	1	THERMOPLASTIC PLASTICS
6	SHELLI	1	STAINLESS STEEL IS NICKEL−PLATED
7	HOUSING	1	THERMOPLASTIC PLASTICS
8	WATERPROOF GLUE	1	EPOXY RESIN

深圳市华宇创精密电子有限公司

TOLERANCE: X.X ±0.30, X.XX ±0.25, X.XXX ±0.15, X.' ±2', X.X" ±0.5'	DRAWED BY: 陈一鸣	DATE: 2014-02-23	PART NAME: USB TYPE C 防水母座16P 立贴6.8H(大电流)
	CHECKED BY: 马跃	DATE: 2014-02-23	PART NO.: HYCW616-USBC16-680B
UNIT: mm [inch]			MOLD NO.:
	APPROVED BY: 邱敏	DATE: 2014-02-23	DRAW NO.: HYC-2510181001
SCALE:1:1	SIZE: A4		SHEET NO.: 1 OF 1

www.dzyjzj.com Tel:0755-27575531 Fax:0755-27576267

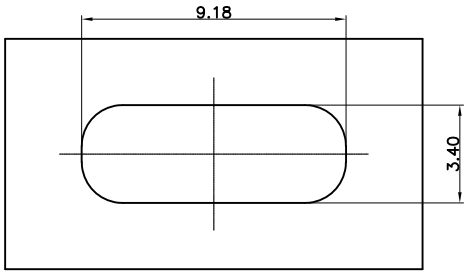



密封开孔参考尺寸(只供参考)
组装外壳时需要打环保润滑油

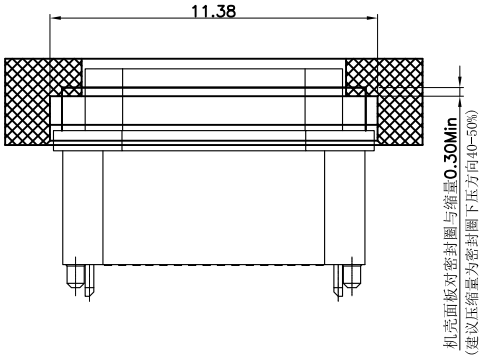

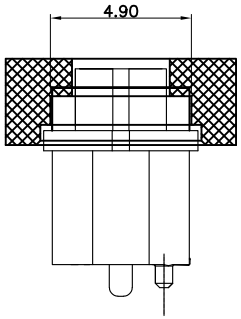

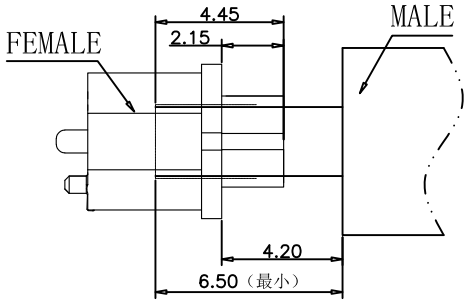

深圳市华宇创精密电子有限公司				
TOLERANCE: X.X ±0.30 X.XX ±0.25 X.XXX ±0.15 X.° ±2° X.X° ±0.5°	DRAWED BY : 陈一鸣	DATE : 2014-02-23	PART NAME: USB TYPE C 防水母座16P 立贴6.8H(大电流)	
	CHECKED BY: 马跃	DATE : 2014-02-23	PART NO.	HYCW616-USBC16-680B
			MOLD NO.	
UNIT: mm [inch]	APPROVED BY: 邱敏	DATE : 2014-02-23	DRAW NO:	HYC-2510181001
SCALE:1:1 SIZE: A4			SHEET NO.	1 OF 1