BORN SEMICONDUCTOR

1.5SMBJ Series

Transient Voltage Suppressor

Features

- Excellent clamping capability
- Low leakage current
- High surge capability
- Glass passivated chip
- Epoxy resin package
- Built-in strain relief
- Will not fatigue
- RoHS Compliant
- IEC 61000-4-2 ±30kV contact ; ±30kV air
- Fast response time:
  typically less than 1.0ps from 0 Volts to V_{BR} min

Package

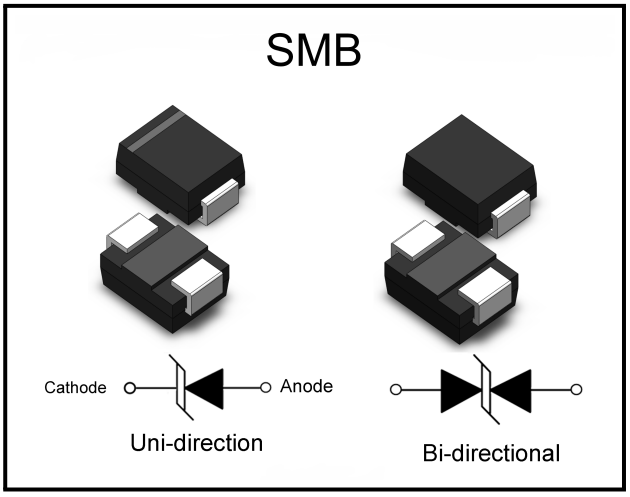

Mechanical Characteristics

- Package: SMB plastic package
- Lead Finish: Matte Tin
- Case Material: Epoxy Molding Compound
- UL Flammability Classification Rating 94V-0
- Moisture Sensitivity: Level 1 per J-STD-020

Applications

- Telecom
- Computer
- Industrial electronic
- Consumer electronic

Making Code

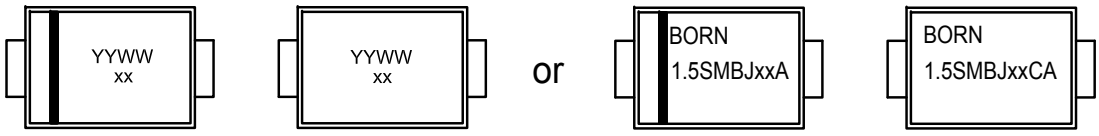

YYWW = Date Code
xx = Type Code

Unidirection

Bidirection

Summary of Packing Options

Package	Packing Description	Packing Quantity	Industry Standard
SMB	Tape/Reel,13” reel	3000	EIA-481-1

BORN SEMICONDUCTOR , INC. ALL RIGHT RESERVED

Specifications are subject to change without notice.
Please refer to http://*www.born-tw.com* for current information.

Revision: 2022-Jan-1-B

1.5SMBJ Series

Transient Voltage Suppressor

Electrical Parameters

Parameter	Definition
C_J	Junction Capacitance - typical capacitance measured with 0V or V_R bias
I_{PP}	Peak Pulse Current - maximum rated peak impulse current
V_C	Clamping Voltage - Peak voltage measured across the suppressor at a specified Ippm
V_{BR}	Breakdown Voltage - Maximum voltage that flows though the TVS at a specified test current (I_T)
I_R	Leakage Current - maximum peak off-state current measured at V_R
V_R	Peak Off-state Voltage - maximum voltage that can be applied while maintaining off state

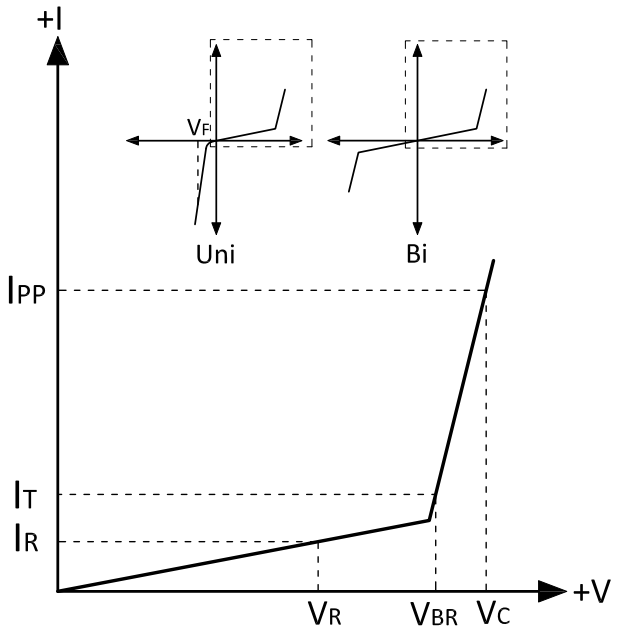

Absolute Maximum Ratings (T_A=+25°C, unless otherwise noted)

Parameter	Symbol	Value	Units
Peak Pulse Power Dissipation (Note1,2)	P_{PPM}	1500	W
Steady State Power Dissipation (Note3)	P_D	5	W
Peak Forward Surge Current (Note4)	I_{FSM}	120	A
Maximum Instantaneous Forward Voltage at 50A (Note5)	V_{FM}	3.5	V
Typical Thermal Resistance Junction to Lead	$R_{\theta JL}$	20	°C/W
Typical Thermal Resistance Junction to Ambient	$R_{\theta JA}$	100	°C/W
Operating Temperature Range	T_J	-55 to 150	°C
Storage Temperature Range	T_{STG}	-55 to 150	°C

Notes:

(1) Non-repetitive current pulse , 10/1000us Waveform.

(2) Mounted on copper pad area of 5×5mm to each terminal.

(3) Infinite HeatSink at T_L =50°C

(4) Measured on 8.3ms single half sine wave or equivalent square wave, duty cycle=4 perminute maximum.

(5) For Unidirectional Only

BORN SEMICONDUCTOR , INC. ALL RIGHT RESERVED

Specifications are subject to change without notice.
Please refer to http://*www.born-tw.com* for current information.

1.5SMBJ Series

Transient Voltage Suppressor

Electrical Characteristics (T_A=+25°C, unless otherwise noted)

Part Number	Part Number	Marking Code		Reverse Stand-Off Votage	Breakdown Voltage V_{BR}@I_T		Test Current I_T	Maximum Clamping Voltage V_C @ I_{pp}	Maximum Peak Pulse Current I_{pp}	Maximun Reverse Leakage I_R @V_R
(Uni)	(Bi)	(Uni)	(Bi)	(V)	Min.(V)	Max.(V)	(mA)	(V)	(A)	(uA)
1.5SMBJ5.0A	1.5SMBJ5.0CA	GDE	BDE	5	6.4	7	10	9.2	163.0	800
1.5SMBJ6.0A	1.5SMBJ6.0CA	GDG	BDG	6	6.67	7.37	10	10.3	145.6	800
1.5SMBJ6.5A	1.5SMBJ6.5CA	GDK	BDK	6.5	7.22	7.98	10	11.2	134.0	500
1.5SMBJ7.0A	1.5SMBJ7.0CA	GDM	BDM	7	7.78	8.6	10	12	125.0	200
1.5SMBJ7.5A	1.5SMBJ7.5CA	GDP	BDP	7.5	8.33	9.21	1	12.9	116.3	100
1.5SMBJ8.0A	1.5SMBJ8.0CA	GDR	BDR	8	8.89	9.83	1	13.6	110.3	50
1.5SMBJ8.5A	1.5SMBJ8.5CA	GDT	BDT	8.5	9.44	10.4	1	14.4	104.2	20
1.5SMBJ9.0A	1.5SMBJ9.0CA	GDV	BDV	9	10	11.1	1	15.4	97.4	10
1.5SMBJ10A	1.5SMBJ10CA	GDX	BDX	10	11.1	12.3	1	17	88.2	5
1.5SMBJ11A	1.5SMBJ11CA	GDZ	BDZ	11	12.2	13.5	1	18.2	82.4	1
1.5SMBJ12A	1.5SMBJ12CA	GEE	BEE	12	13.3	14.7	1	19.9	75.4	1
1.5SMBJ13A	1.5SMBJ13CA	GEG	BEG	13	14.4	15.9	1	21.5	69.8	1
1.5SMBJ14A	1.5SMBJ14CA	GEK	BEK	14	15.6	17.2	1	23.2	64.7	1
1.5SMBJ15A	1.5SMBJ15CA	GEM	FMM	15	16.7	18.5	1	24.4	61.5	1
1.5SMBJ16A	1.5SMBJ16CA	GEP	BEP	16	17.8	19.7	1	26	57.7	1
1.5SMBJ17A	1.5SMBJ17CA	GER	BER	17	18.9	20.9	1	27.6	54.4	1
1.5SMBJ18A	1.5SMBJ18CA	GET	BET	18	20	22.1	1	29.2	51.4	1
1.5SMBJ20A	1.5SMBJ20CA	GEV	BEV	20	22.2	24.5	1	32.4	46.3	1
1.5SMBJ22A	1.5SMBJ22CA	FTT	BEX	22	24.4	26.9	1	35.5	42.3	1
1.5SMBJ24A	1.5SMBJ24CA	GEZ	BEZ	24	26.7	29.5	1	38.9	38.6	1
1.5SMBJ26A	1.5SMBJ26CA	GFE	BFE	26	28.9	31.9	1	42.1	35.6	1
1.5SMBJ28A	1.5SMBJ28CA	GFG	BFG	28	31.1	34.4	1	45.4	33.1	1
1.5SMBJ30A	1.5SMBJ30CA	GFK	BFK	30	33.3	36.8	1	48.4	31.0	1
1.5SMBJ33A	1.5SMBJ33CA	GFM	BFM	33	36.7	40.6	1	53.3	28.2	1
1.5SMBJ36A	1.5SMBJ36CA	GFP	BFP	36	40	44.2	1	58.1	25.8	1
1.5SMBJ40A	1.5SMBJ40CA	GFR	BFR	40	44.4	49.1	1	64.5	23.3	1
1.5SMBJ43A	1.5SMBJ43CA	GFT	BFT	43	47.8	52.8	1	69.4	21.6	1
1.5SMBJ45A	1.5SMBJ45CA	GFV	BFV	45	50	55.3	1	72.7	20.6	1
1.5SMBJ48A	1.5SMBJ48CA	FMF	BJT	48	53.3	58.9	1	77.4	19.4	1
1.5SMBJ51A	1.5SMBJ51CA	GJV	BJV	51	56.7	62.7	1	82.4	18.2	1
1.5SMBJ54A	1.5SMBJ54CA	FFF	BFX	54	60	66.3	1	87.1	17.2	1
1.5SMBJ58A	1.5SMBJ58CA	GFZ	BFZ	58	64.4	71.2	1	93.6	16.1	1

BORN SEMICONDUCTOR , INC. ALL RIGHT RESERVED

Specifications are subject to change without notice.
Please refer to http://*www.born-tw.com* for current information.

1.5SMBJ Series

Transient Voltage Suppressor

Electrical Characteristics (T_A=+25°C, unless otherwise noted)

Part Number	Part Number	Marking Code		Reverse Stand-Off Votage	Breakdown Voltage V_{BR}@I_T		Test Current I_T	Maximum Clamping Voltage V_C @ I_{pp}	Maximum Peak Pulse Current I_{pp}	Maximun Reverse Leakage I_R @V_R
(Uni)	(Bi)	(Uni)	(Bi)	(V)	Min.(V)	Max.(V)	(mA)	(V)	(A)	(uA)
1.5SMBJ60A	1.5SMBJ60CA	GGE	BGE	60	66.7	73.7	1	96.8	15.5	1
1.5SMBJ64A	1.5SMBJ64CA	GGG	BGG	64	71.1	78.6	1	103	14.6	1
1.5SMBJ70A	1.5SMBJ70CA	GGK	BGK	70	77.8	86	1	113	13.3	1
1.5SMBJ75A	1.5SMBJ75CA	GGM	BGM	75	83.3	92.1	1	121	12.4	1

Note: 1.5SMBJ15CA、1.5SMBJ22A Marking is no date code.

BORN SEMICONDUCTOR , INC. ALL RIGHT RESERVED

Specifications are subject to change without notice.
Please refer to http://*www.born-tw.com* for current information.

1.5SMBJ Series

Transient Voltage Suppressor

Ratings and Characteristic Curves (T_A=+25°C, unless otherwise noted)

Figure 1: Peak Pulse Power Rating

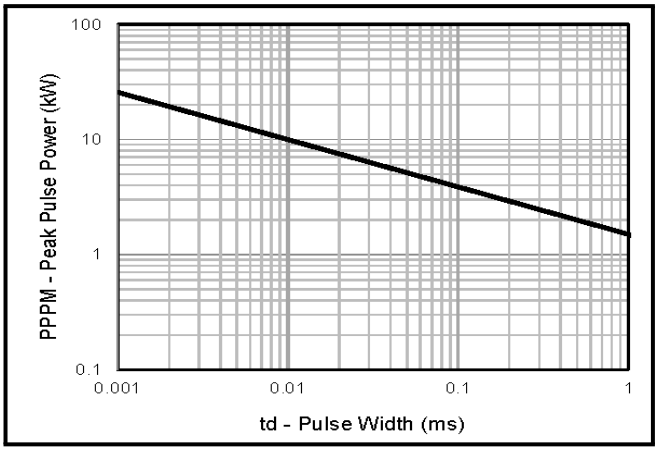

Figure 2: Pulse Derating Curve

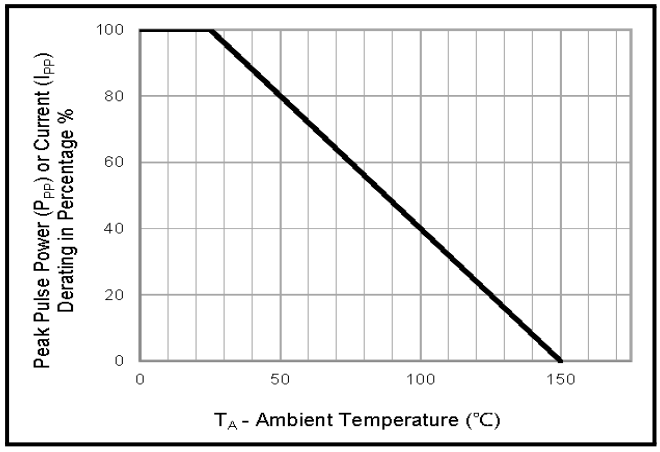

Figure 3: Pulse Waveform

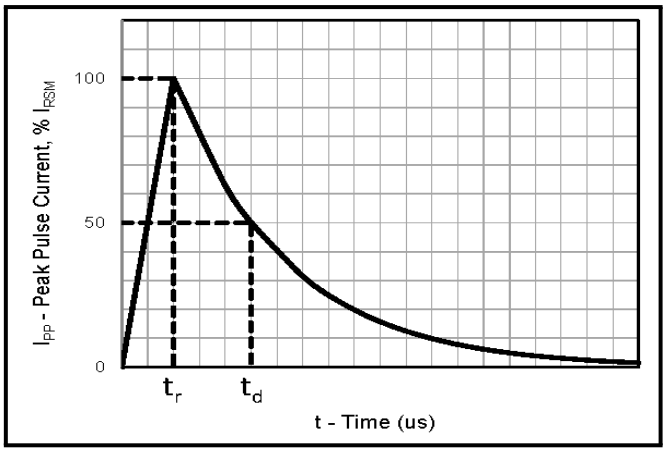

Figure 4 : Typical Junction Capacitance

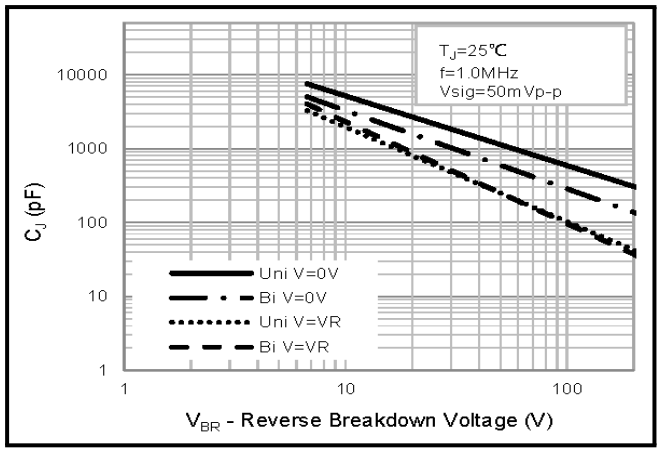

Figure 5: Steady State Power Dissipation Derating Curve

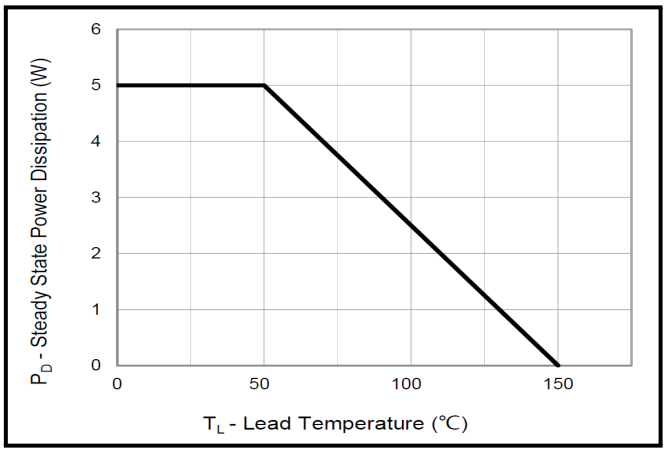

Figure 6 : Maximum Non-Repetitive Peak Forward Surge Current Uni-Directional Only

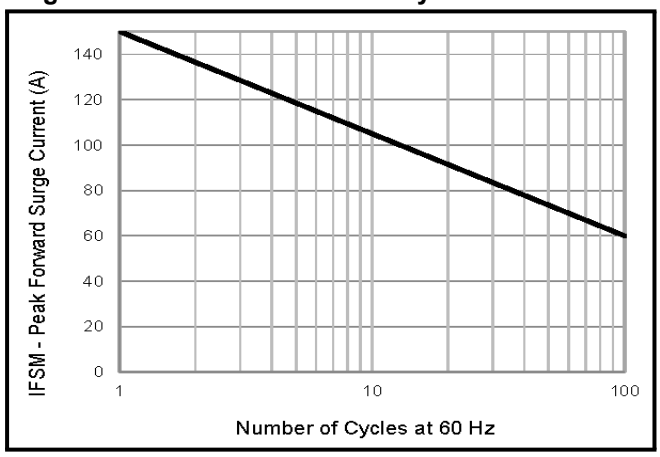

BORN SEMICONDUCTOR , INC. ALL RIGHT RESERVED

1.5SMBJ Series

Transient Voltage Suppressor

Soldering Parameters

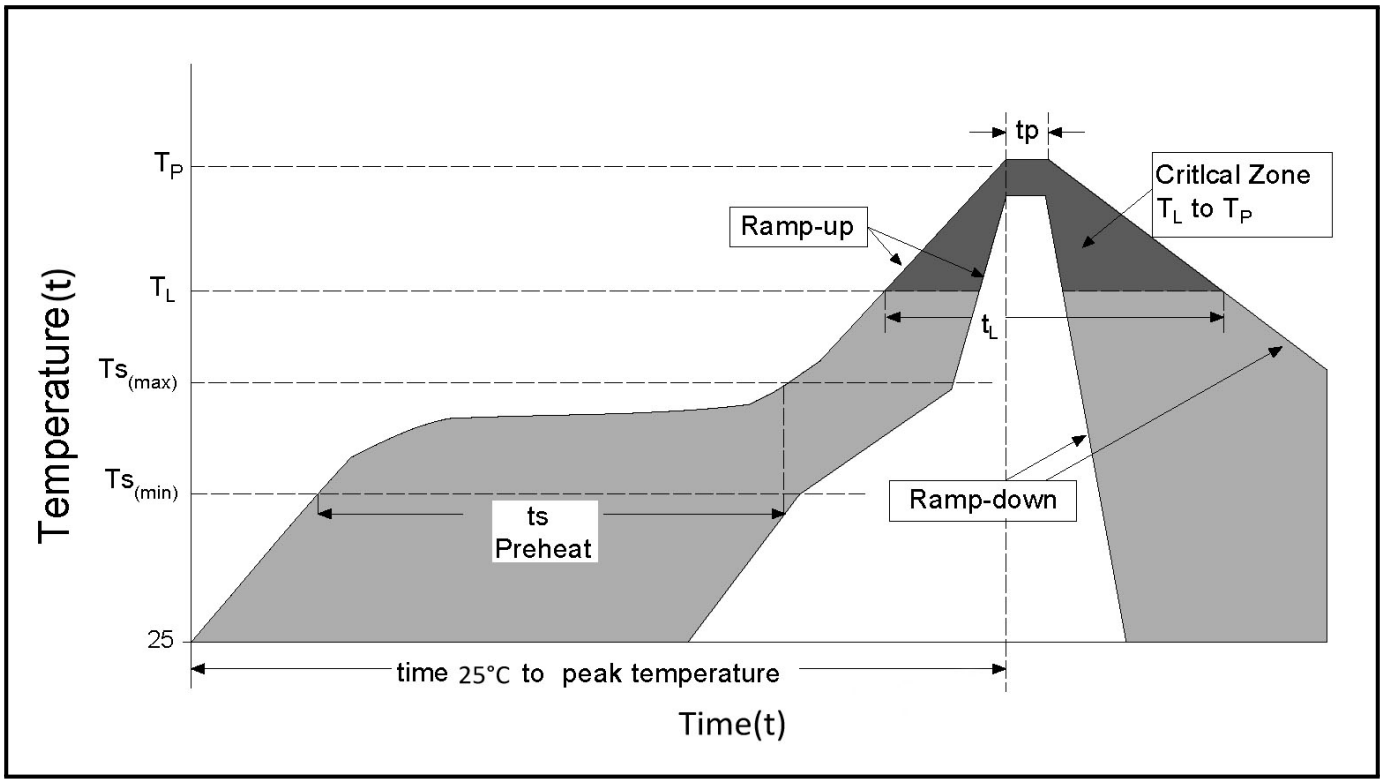

Reflow Condition		Lead-free assembly
Pre Heat	- Temperature Min (T_S(min))	150°C
	- Temperature Max (T_S(max))	200°C
	- Time (min to max) (t_S)	60 - 180 secs
Average ramp up rate (Liquidus Temp (T_L) to peak)		3°C/second max
T_S(max) to T_L - Ramp-up Rate		3°C/second max
Reflow	- Temperature (T_L) (Liquidus)	217°C
	- Time (t_L)	60 -150 secs
Peak Temperature (T_P)		$260^{+0/-5°C}$
Time within 5°C of actual peak Temperature (t_p)		20 - 40 secs
Ramp-down Rate		6°C/second max
Time 25°C to peak Temperature (t)		8 minutes Max.
Do not exceed		260°C

BORN SEMICONDUCTOR , INC. ALL RIGHT RESERVED

Specifications are subject to change without notice.
Please refer to http://*www.born-tw.com* for current information.

1.5SMBJ Series

Transient Voltage Suppressor

Outline Drawing – SMB

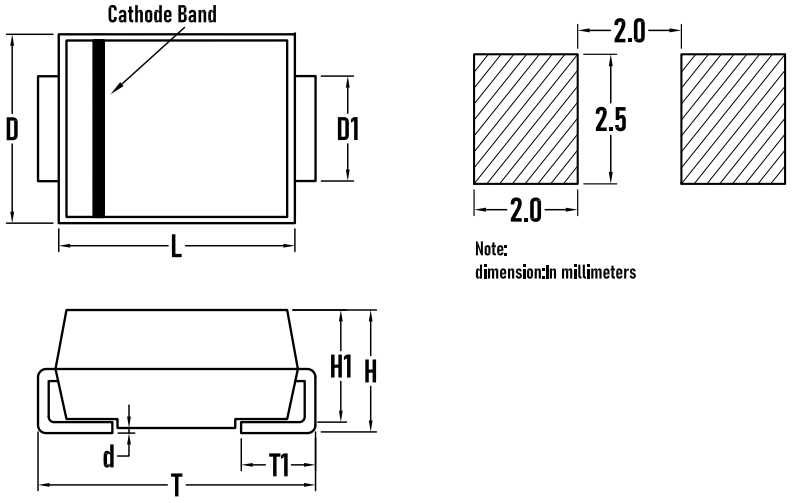

SYMBOL	MILLIMETER		Inches	
	MIN	MAX	MIN	MAX
D	3.3	3.9	0.130	0.154
D1	1.7	2.3	0.067	0.091
T	5.1	5.7	0.201	0.224
T1	0.8	1.6	0.031	0.063
d	–	0.3	–	0.012
H1	2.0	2.4	0.079	0.094
H	2.1	2.7	0.083	0.098
L	4.0	4.7	0.157	0.185

Packaging Tape - SMB

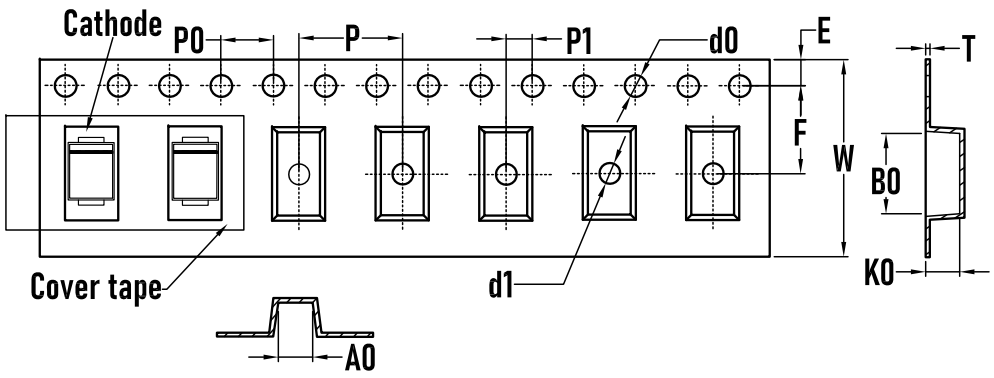

SYMBOL	MILLIMETER
A0	3.60±0.1
B0	5.45±0.1
d0	1.50±0.1
d1	1.50±0.1
E	1.75±0.1
F	5.50±0.1
K0	2.30±0.1
P	8.00±0.1
P0	4.00±0.1
P1	2.00±0.1
W	12.00±0.1
T	0.22±0.02

Packaging Reel

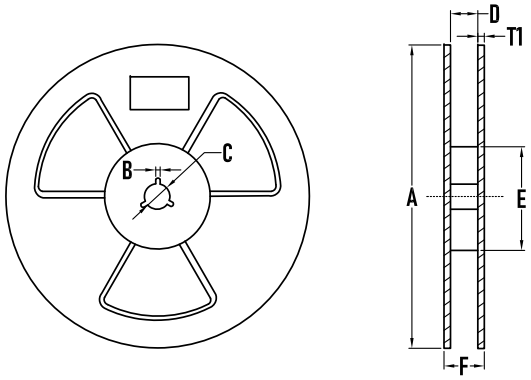

SYMBOL	MILLIMETER
A	323±2
B	3.0±0.2
C	15.0±0.5
D	13±2
E	73±2
T1	2.2±0.2
Quantity	3000PCS

BORN SEMICONDUCTOR , INC. ALL RIGHT RESERVED

Specifications are subject to change without notice.
Please refer to http://*www.born-tw.com* for current information.

Revision: 2022-Jan-1-B