ROHS Compliant

MAPX	MODIFICATION	DATE	DRAW	APPROVE

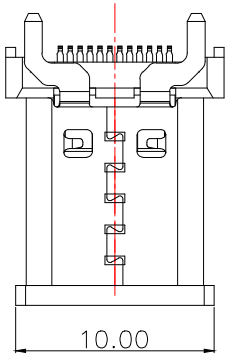

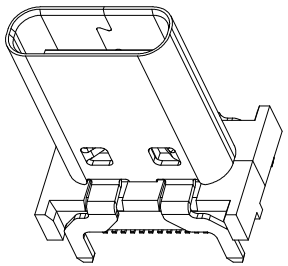
WITHOUT COVER

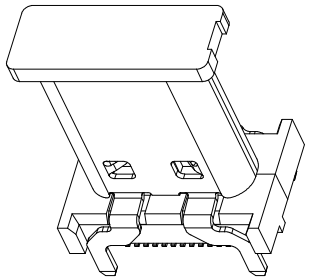
WITH COVER

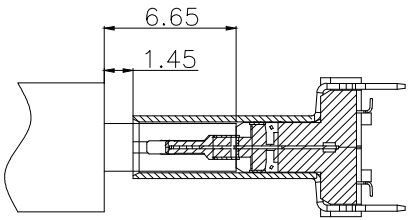

AFTER MATING

说明:
1.接触电阻: 最大40mOHM;
2.介电耐压: 100V AC持续1分钟;
3.绝缘电阻: 100M OHM Min;
4.配合力和不配合力:
配合力: 5~20N
不配合力: 8~20N;
试验后6~ 20n;
5.耐久性:10000次;

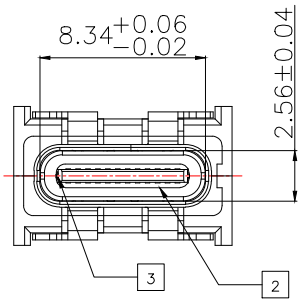

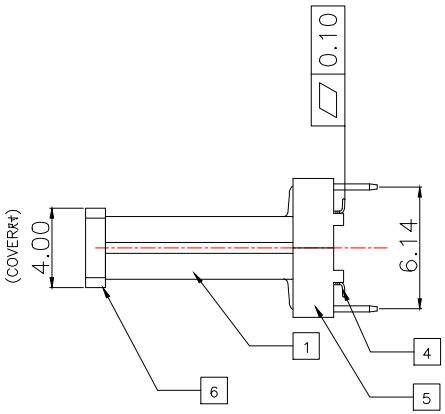

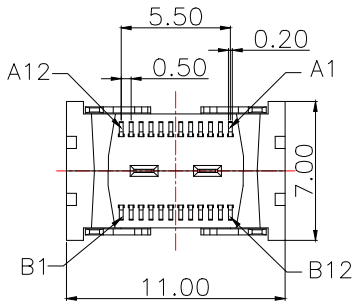

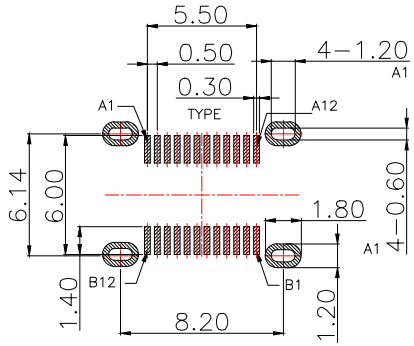

RECOMMEND P.C.B LAYOUT(COMPONENT SIDE)
TOLERANCE FOR PCB LAYOUT IS ± 0.05
KEEP OUT AREA

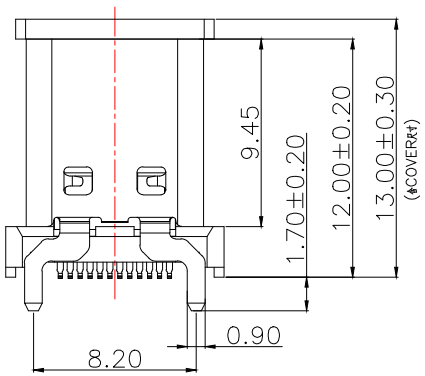

USB TYPE-C PIN ASSIGNMENTS

PIN NUMBER	SIGNAL NAME
A1	GND
A2	TX1+
A3	TX1−
A4	VBUS
A5	CC1
A6	D+
A7	D−
A8	SBU1
A9	VBUS
A10	RX2−
A11	RX2+
A12	GND

PIN NUMBER	SIGNAL NAME
B12	GND
B11	RX1+
B10	RX1−
B9	VBUS
B8	SBU2
B7	D−
B6	D+
B5	CC2
B4	VBUS
B3	TX2−
B2	TX2+
B1	GND

Item	Title	Material	Dispose	Q'TY
1	Shell	Stainless Steel	Ni:30u" Min.	1PCS
2	GND Plate	Stainless Steel		2PCS
3	Mid Plate	Stainless Steel		1PCS
4	Contact	Copper Alloy	Mating Area: See P/N Solder Tails: Matt Tin	24PCS
5	InsertMolding	High Temperature Plastic	UL 94V-0 Black	1PCS
6	COVER	High Temperature Plastic	UL 94V-0 Black	1PCS

MANUFACTURE DWG

东莞市讯普电子科技有限公司
DongGuan XunPu Electronics Co,Ltd

UNLESS OTHERWISE SPECIFIED TOLERANCES

DECIMALS:	ANGLES:
X.:±0.35	X.°:±2°
X.X:±0.25	X.X°:±1.5°
X.XX:±0.15	
X.XXX:±0.10	

CUSTOMER COPY

TITLE: USB 3.1 TYPE C FEMALE VERTICAL H12.0mm SMT TYPE

PAR	TYPE-C-517-LDRH130	
DWN	Lucas	
CHKD	Ethan	
APVD	Jacob	
SCALE1:1	UNIT:MM	
SIZE:A4	SHEET:1F1	REV:A