REVISIONS					
REV.	ECN NO.	LOCATION	DESCRIPTION	DATE	DESIGN
A2	N/A			2025.12.25	
A3	N/A			2026.03.09	

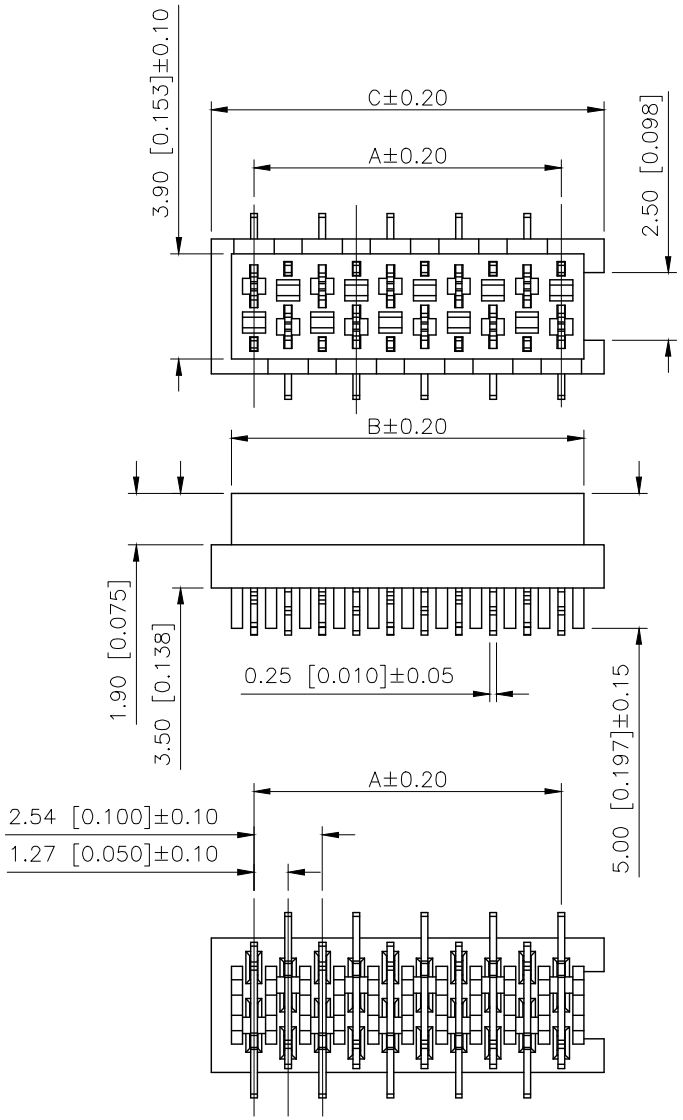

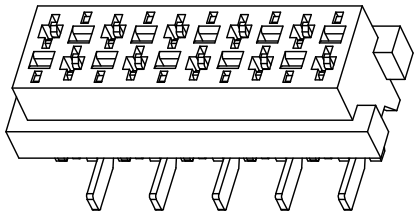

3D VIEW

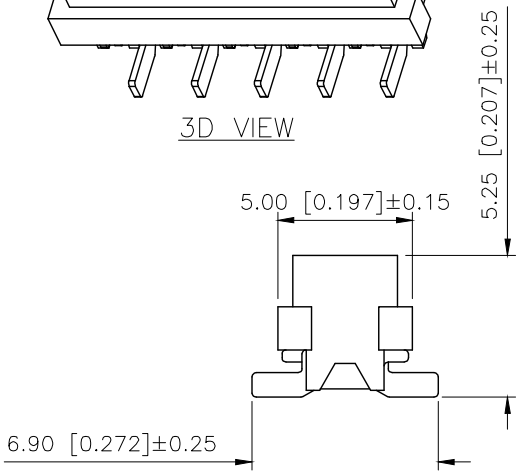

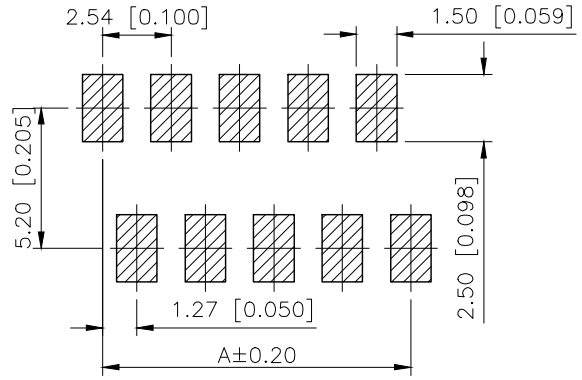

Recommended P.C.B

Specifications( )
1.Voltage rating( ):500V AC/DC
2.Current rating( ):1A AC/DC
3.Withstanding voltage( ):1000V AC/minute
4.Insulation resistance( ):≥1000MΩ Min
5.Contact resistance( ):≤20mΩ Max
6.After environmental testing( ):≤30mΩ Max
7.Temperature range( ):−45 −+125

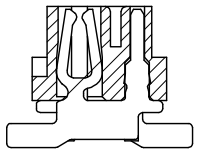

SECTION A−A

PART NO.:

X9127 F V S−22 A−6T SN RE

Series No
Category:F−Female
Welding Board Angle:V−Stright 180°
Welding Way: S−SMT
Row No.Pin No:XX−03~26Pin
Special N0:A−No ears, no platform, single missing
Material:6T−PA6T UL94V−0
Planting: SN−Bright tin plating
Color:RE−Red ; RD−Purplish red

PART NO.	COLOR	MATERIAL	MATERIAL (TERMINAL)	FINISH (TERMINAL)	Suitable XKB Wafer
X9127FVS−22A−6TSNRD	Purplish red	PA6T UL 94V−0	BRASS	Tin−Plated	X9127W
X9127FVS−22A−6TSNRE	RED				

Poles	Dimensions(mm) A	B	C	Poles	Dimensions(mm) A	B	C
4	3.81	5.50	6.99	16	19.05	20.74	22.23
6	6.35	8.04	9.53	18	21.59	23.28	24.77
8	8.89	10.58	12.07	20	24.13	25.82	27.31
10	11.43	13.12	14.61	22	26.67	28.36	29.85
12	13.97	15.66	17.15	24	29.21	30.90	32.39
14	16.51	18.20	19.69	26	31.75	33.44	34.93

AuGLAR	±5°
X.	±0.40
X.x	±0.30
X.xx	±0.20
X.xxx	±0.15
UNSPECIFIED TOLERAuCES	

XKB 星坤 Connection

DESIGN		VIEW:	MODEL TYPE: 1.27mm Crimp Style Connectors( )
CHECKED		UNIT: mm/in	PART NO.: X9127FVS−22A−6TSNRE
APPROVED		SIZE: A4	DWG NO.:

XKB INDUSTRIAL PRECISION CO.,LIMITED

SCALE	PAGE	REVISION
N/A	1/1	A3

www.helloxkb.com www.helloxkb.cn www.xk−dg.cn