TECH PUBLIC
台舟电子

TPCAT811LTBI-GT3

Power Supply Supervisorswith Manual Reset

WWW.TECHPUBLIC.COM

Features

- High Accurate ±5%
- Precision VCC Monitoring of +2.5V, +3V, +3.3Vand +5V Supplies
- Power Supply Transient Immunity
- Guaranteed Reset Valid to VCC=+1V
- Fully Specified Over Temperature
- 6μA Supply Current
- Output Configuration: push-pull output

Applications

- Battery-operated systems and controllers
- Embedded Control Systems
- Critical μP and μC power monitoring
- Portable / Battery powered equipment
- Automotive

Pin Definition SOT-143

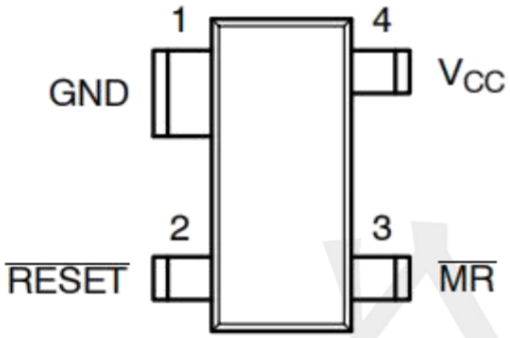

Ordering Information

TPCAT811LTBI-GT3

RESET VOLTAGE: L=4.63V
M=4.38V
T=3.08V
S=2.93V
R=2.63V
Z=2.32V

PIN CONFIGURATION

PIN	NAME	FUNCTION
1	GND	Ground
2	$\overline{\text{RESET}}$	Active LOW reset. $\overline{\text{RESET}}$ is asserted if VCC falls below the reset threshold and re mains low for at least 140 ms after VCC rises above the reset threshold.
3	$\overline{\text{MR}}$	Manual Reset Input. A logic LOW on $\overline{\text{MR}}$ asserts RESET. RESET remains active as long as $\overline{\text{MR}}$ is LOW and for 140 ms after $\overline{\text{MR}}$ returns HIGH. The active low input has an internal 20 kΩ pull−up resistor. The input should be left open if not used.
4	VCC	Power supply voltage that is monitored.

WWW.SOT23.COM.TW

Absolute Maximum Ratings

Symbol	Parameter	Value	UNIT
VCC	Any pin with respect to ground	-0.3 to +6.0	V
ICC	Input Current, VCC	20	mA
IO	Output Current,$\overline{\text{RESET}}$	20	mA
	Rate of Rise, VCC	100	V/μs
PD	Continuous Power Dissipation Derate 4mW/°C above 70°C	320	mW
TA	Operating Temperature Range	-40 to +85	℃
TSTG	Storage Temperature Range	-65 to +105	℃
$R_{\theta JC}$	Thermal Resistance from Junction to Case	110	°C/W
$R_{\theta JA}$	Thermal Resistance from Junction to Ambient	250	°C/W

TYPICAL APPLICATIN CIRCUIT

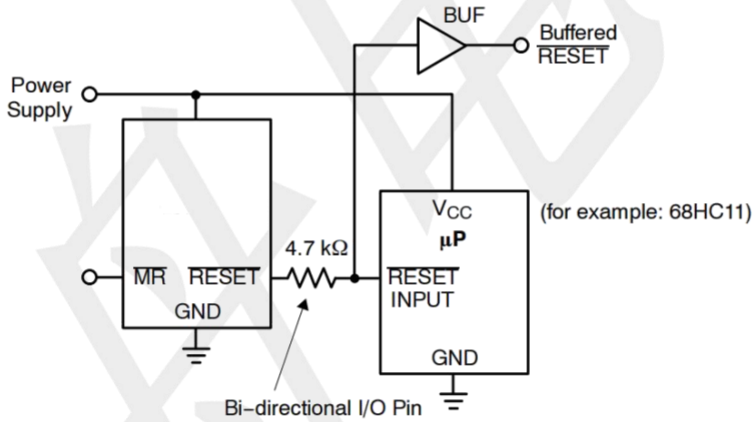

FUNCTIONAL BLOCK DIAGRAM

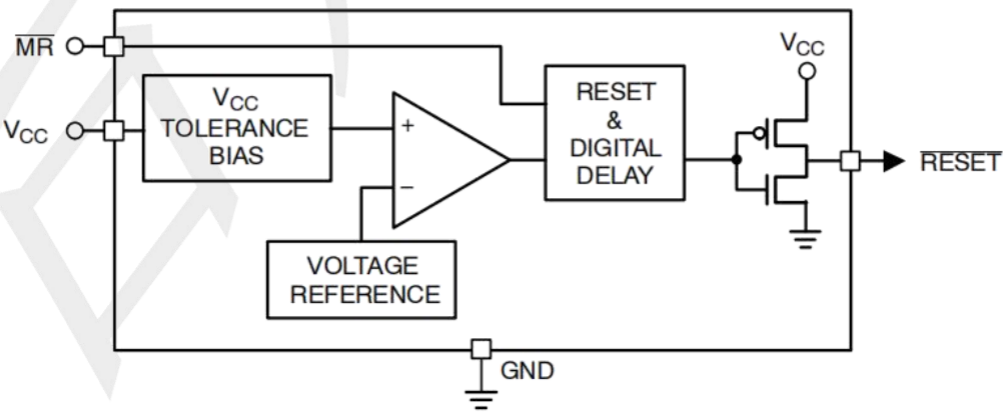

Electrical Characteristics

(VCC=5V for L/M/J versions, VCC=3.3V for T/S versions, VCC=3V for R version, and VCC=2.5V for Z version, TA=-40°C to +85°C, unless otherwise noted. Typical values are at TA=+25°C.)

Symbol	Parameter	Conditions		MIN	Typ	MAX	UNIT
VCC	Supply Voltage Range	TA=0°C to +70°C		1.0	--	5.5	V
		TA=-40°C to +85°C		1.2	--	5.5	
ICC	Supply Current			--	6.0	--	uA
VTH	Reset Threshold	L Version	TA=+25°C	4.56	4.63	4.70	V
			TA=-40°C to +85°C	4.50	--	4.75	
		M Version	TA=+25°C	4.31	4.38	4.45	
			TA=-40°C to +85°C	4.25	--	4.50	
		J Version	TA=+25°C	3.93	4.00	4.06	
			TA=-40°C to +85°C	3.89	--	4.10	
		T Version	TA=+25°C	3.04	3.08	3.11	
			TA=-40°C to +85°C	3.00	--	3.15	
		S Version	TA=+25°C	2.89	2.93	3.96	
			TA=-40°C to +85°C	2.85	--	3.00	
		R Version	TA=+25°C	2.59	2.63	2.66	
			TA=-40°C to +85°C	2.55	--	2.70	
		Z Version	TA=+25°C	2.28	2.32	2.35	
			TA=-40°C to +85°C	2.25	--	2.38	
	Reset Threshold Tempco			--	150	--	ppm/°C
	VCC to Reset Delay	VCC=VTH to (VTH–100mV)		--	20	--	µS
TRP	Reset Active Timeout Period	TA=-40°C to +85°C		140	240	450	mS
VOL	$\overline{\text{RESET}}$ Output Voltage Low (Push−pull, active)	VCC=VTH min, ISINK=1.2mA, T_/S_/R_/Z_		--	--	0.3	V
		VCC=VTH min, ISINK=3.2mA, T_/S_/R_/Z_		--	--	0.4	
		VCC>1.0V, ISINK=50µA		--	--	0.3	
tMR	$\overline{\text{MR}}$ Minimum Pulse Width			--	10	1	µS
VIH	$\overline{\text{MR}}$ Input Threshold	VCC > VTH (MAX), L/M/J		2.3	--	--	V
VIL				--	--	0.8	
VIH		VCC > VTH (MAX), T/S/R/Z		$0.7V_{CC}$	--	--	
VIL				--	--	$0.25V_{CC}$	
	$\overline{\text{MR}}$ Pull−up Resistance			10	20	75	KΩ

Typical Operating Characteristics

(VCC = Full range, TA = −40°C to +85°C unless otherwise noted. Typical values at TA = +25°C and VCC = 5 V for the L/M/J versions,VCC = 3.3 V for the T/S versions, VCC = 3 V for the R version and VCC = 2.5 V for the Z version.)

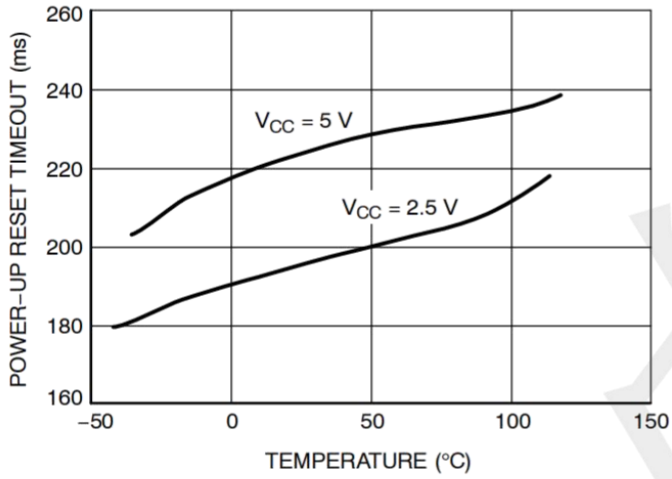

Power−Up Reset Timeout vs. Temperature

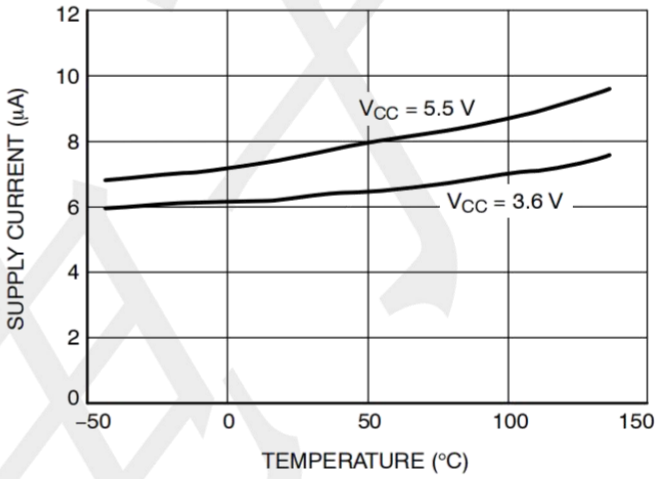

Supply Current vs. Temperature (No Load, R/S/T/Z)

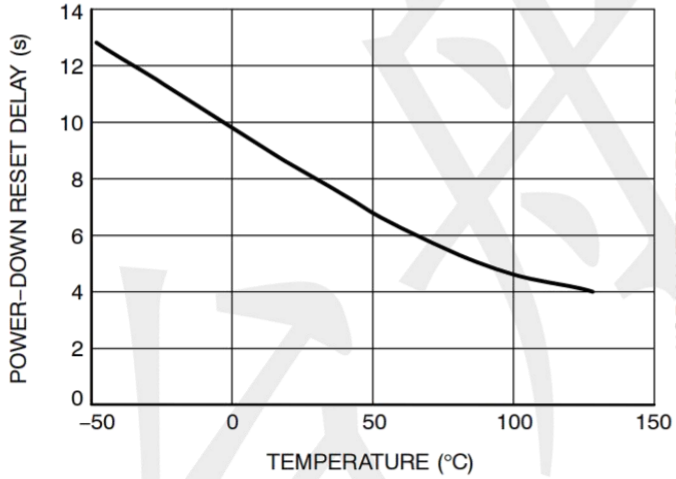

Power−Down Reset Delay vs. Temperature S/T/Z

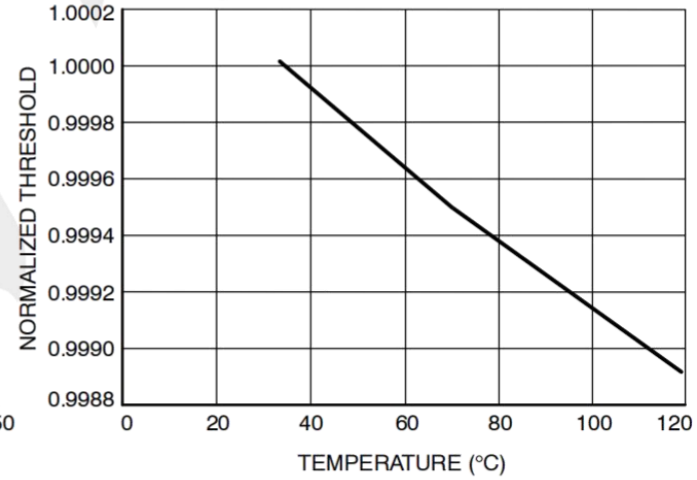

Normalized Reset Threshold vs. Temperature

Package informantion SOT−143, 4 Lead

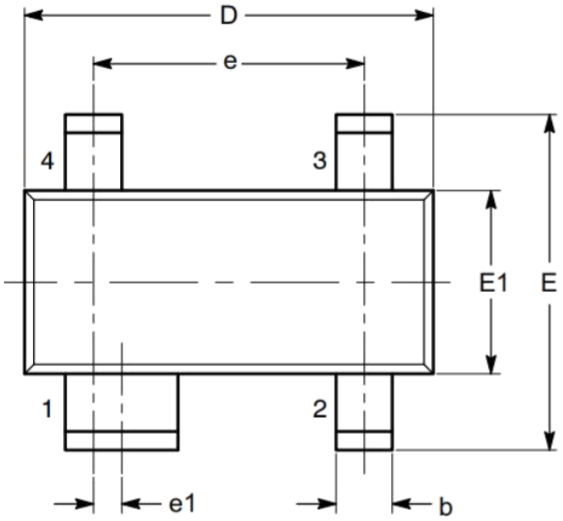

TOP VIEW

SYMBOL	MIN	NOM	MAX
A	0.80		1.22
A1	0.05		0.15
A2	0.75	0.90	1.07
b	0.30		0.50
b2	0.76		0.89
c	0.08		0.20
D	2.80	2.90	3.04
E	2.10		2.64
E1	1.20	1.30	1.40
e	1.92 BSC		
e1	0.20 BSC		
L	0.40	0.50	0.60
L1	0.54 REF		
L2		0.25	
θ	0°		8°

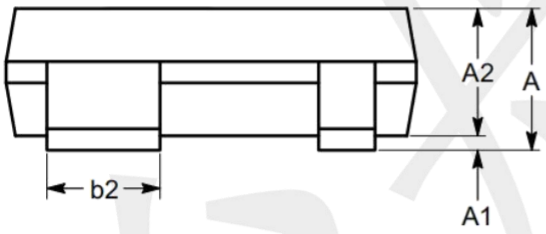

SIDE VIEW

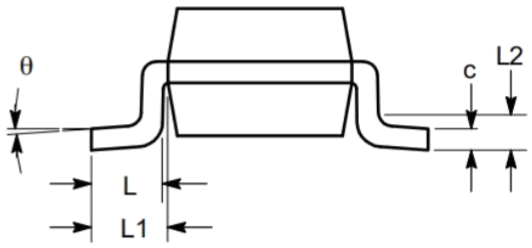

END VIEW

Notes:

(1) All dimensions are in millimeters. Angles in degrees.
(2) Complies with JEDEC TO-253.