TPMIC803-xxD3VM3 Series

Microprocessor Reset Circuit

Features

- High Accurate ±2%
- Precision VCC Monitoring of +2.5V, +3V, +3.3Vand +5V Supplies
- Power Supply Transient Immunity
- Guaranteed Reset Valid to VCC=+1V
- Fully Specified Over Temperature
- 2μA Supply Current
- Available in One Output Configuration: Open-Drain Active-Low $\overline{\text{RESET}}$ Output
- Packages SOT-23

Applications

- Computers
- Embedded Systems
- Battery-Powered Equipments
- Intelligent Instruments
- CPU and Logic Circuit Reset
- Power Fail Detectors
- Automotive

Pin Definition

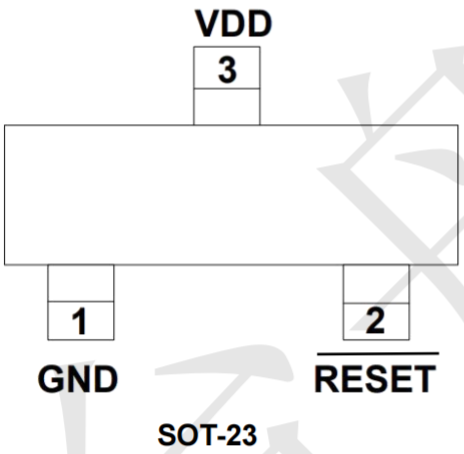

Ordering Information

TPMIC803-40D3VM3

RESET VOLTAGE:

46=4.63V
44=4.38V
40=4.00V
31=3.08V
29=2.93V
26=2.63V

PIN CONFIGURATION

PIN	NAME	FUNCTION
1	GND	Ground
2	$\overline{\text{RESET}}$	$\overline{\text{RESET}}$ Output remains low while VCC is below the reset threshold, and for at least 140ms after VCC rises above the reset threshold.
3	VCC	+5V, +3.3V, +3V or +2.5V Supply Voltage .

Absolute Maximum Ratings

Symbol	Parameter	Value	UNIT
VCC	Supply Voltage	-0.3 to +6.0	V
	$\overline{\text{RESET}}$	-0.3 to +6.0	V
ICC	Input Current, VCC	20	mA
IO	Output Current,$\overline{\text{RESET}}$	20	mA
	Rate of Rise, VCC	100	V/μs
PD	Continuous Power Dissipation Derate 4mW/°C above 70°C	320	mW
TA	Operating Temperature Range	-40 to +105	℃
TSTG	Storage Temperature Range	-65 to +150	℃
$R_{\theta JC}$	Thermal Resistance from Junction to Case	110	°C/W
$R_{\theta JA}$	Thermal Resistance from Junction to Ambient	250	°C/W

TYPICAL APPLICATIN CIRCUIT

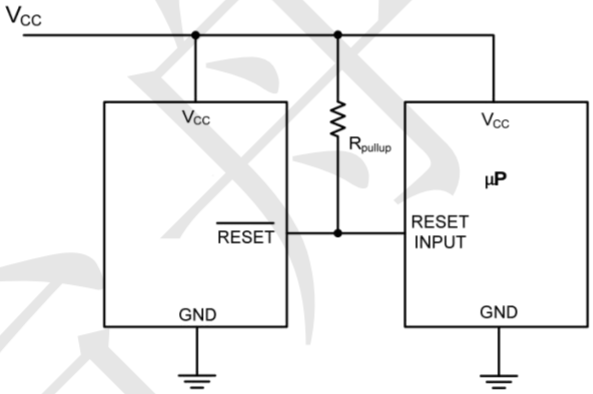

FUNCTIONAL BLOCK DIAGRAM

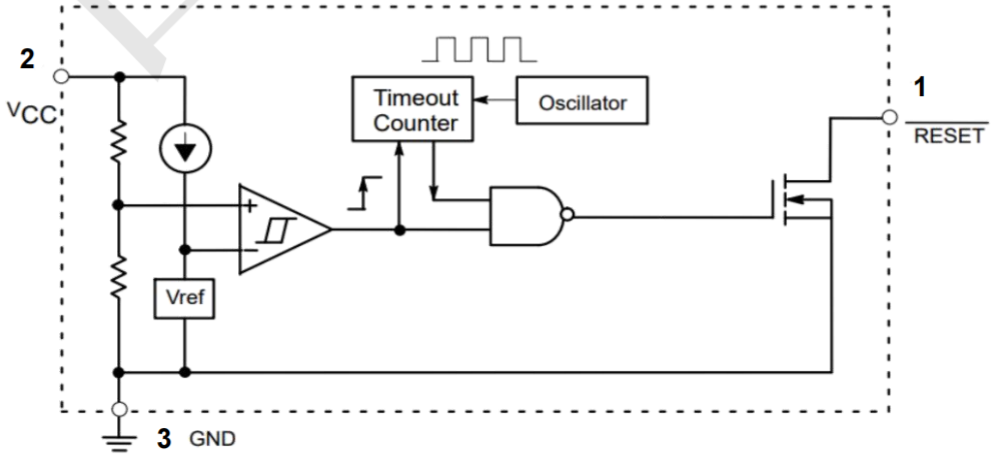

Electrical Characteristics

Symbol	Parameter	Conditions		MIN	Typ	MAX	UNIT
VCC	Supply Voltage Range	TA=0°C to +70°C		1.0	--	5.5	V
ICC	Supply Current			--	2.0	--	uA
VTH	Reset Threshold	46 Version	TA=+25°C	4.56	4.63	4.70	V
			TA=-40°C to +85°C	4.50	--	4.75	
		44 Version	TA=+25°C	4.31	4.38	4.45	
			TA=-40°C to +85°C	4.25	--	4.50	
		40 Version	TA=+25°C	3.93	4.00	4.06	
			TA=-40°C to +85°C	3.89	--	4.10	
		31 Version	TA=+25°C	3.04	3.08	3.11	
			TA=-40°C to +85°C	3.00	--	3.15	
		29 Version	TA=+25°C	2.89	2.93	2.96	
			TA=-40°C to +85°C	2.85	--	3.00	
		26 Version	TA=+25°C	2.59	2.63	2.66	
			TA=-40°C to +85°C	2.55	--	2.70	
	Reset Threshold Tempco			--	150	--	ppm/°C
	VCC to Reset Delay	VCC=VTH to (VTH–100mV)		--	10	--	μS
TRP	Reset Active Timeout Period			140	240	560	mS
VOL	$\overline{\text{RESET}}$ Output Voltage Low	VCC=VTH min, ISINK=1.2mA, T_/S_/R_/Z_		--	--	0.3	V
		VCC=VTH min, ISINK=3.2mA, T_/S_/R_/Z_		--	--	0.4	
		VCC>1.0V, ISINK=50μA		--	--	0.3	
	RESET Open-Drain Output Leakage Current	VCC>VTH, RESET Deasserted		--	--	1	μA

Typical Operating Characteristics(TA=+25°C, unless otherwise noted.)

Supply Current vs. Temperature

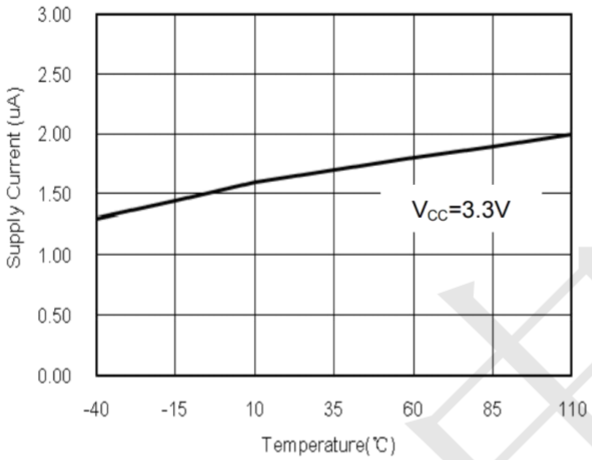

Power-Down RESET Delay vs. Temperature

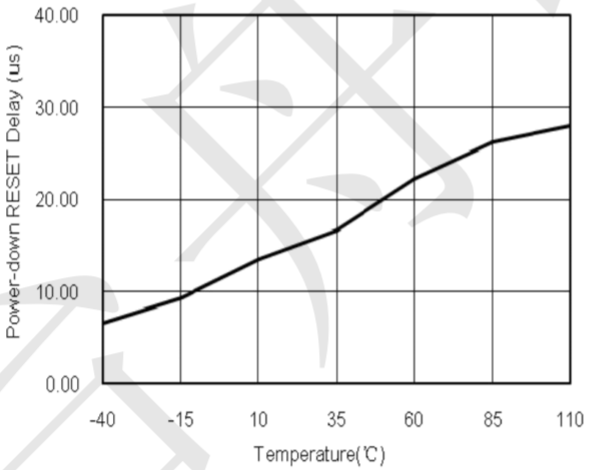

Power-Up RESET Timeout vs. Temperature

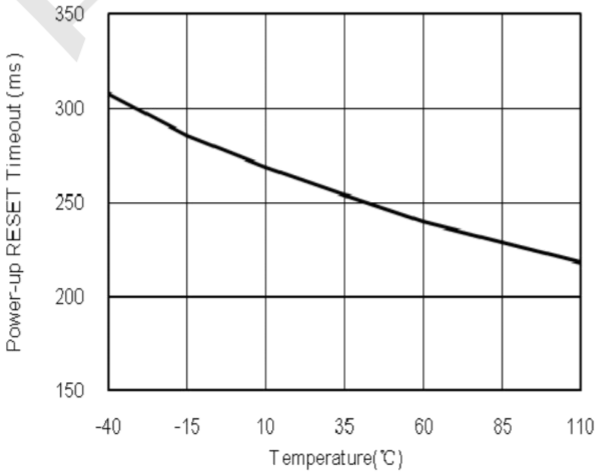

Package Outline Dimensions (unit: mm)

SOT-23

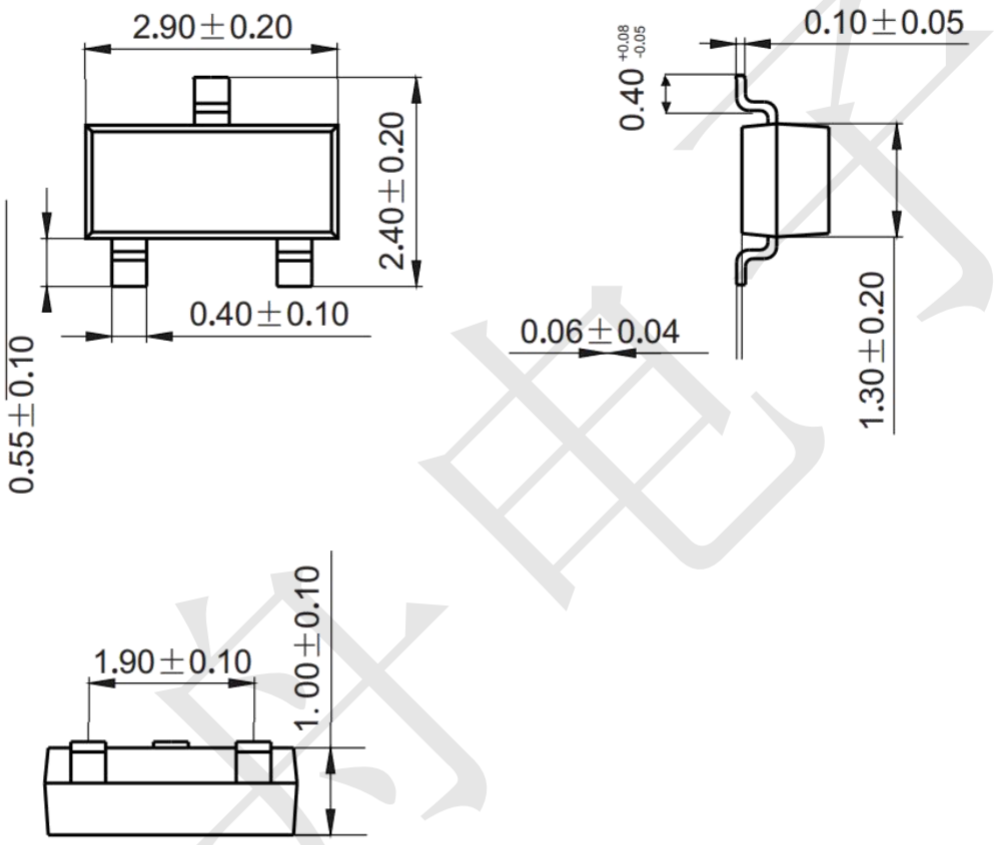

Mounting Pad Layout (unit: mm)

