RoHS Compliant

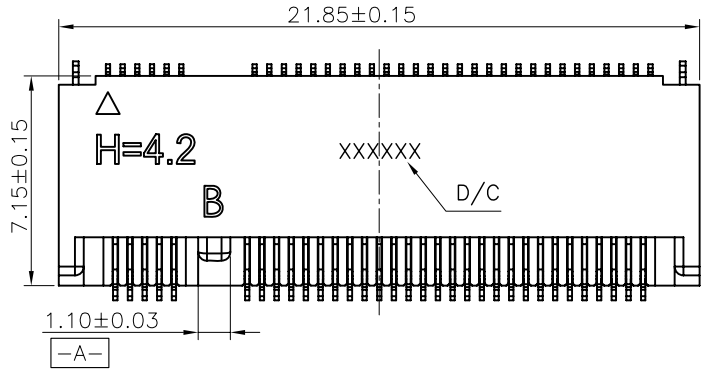

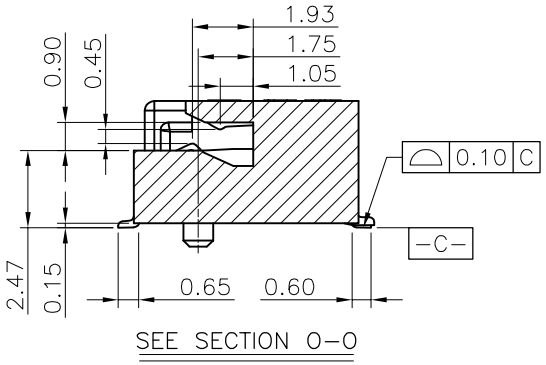

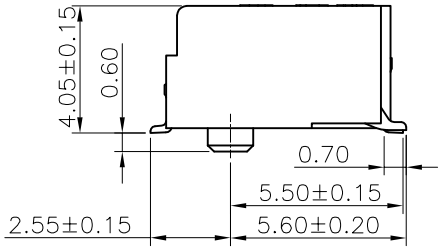

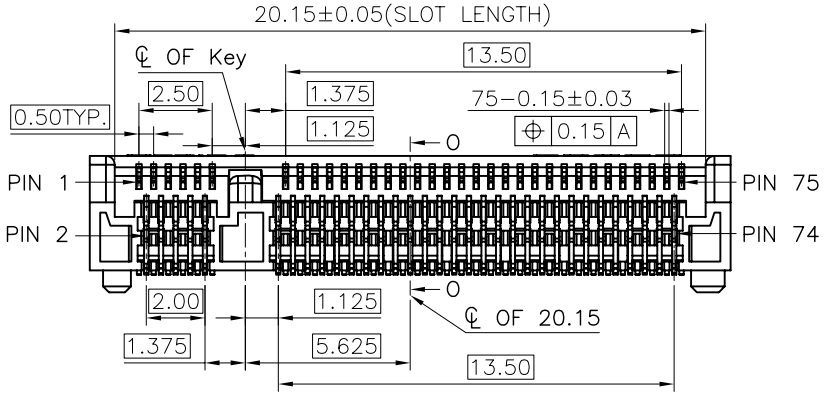

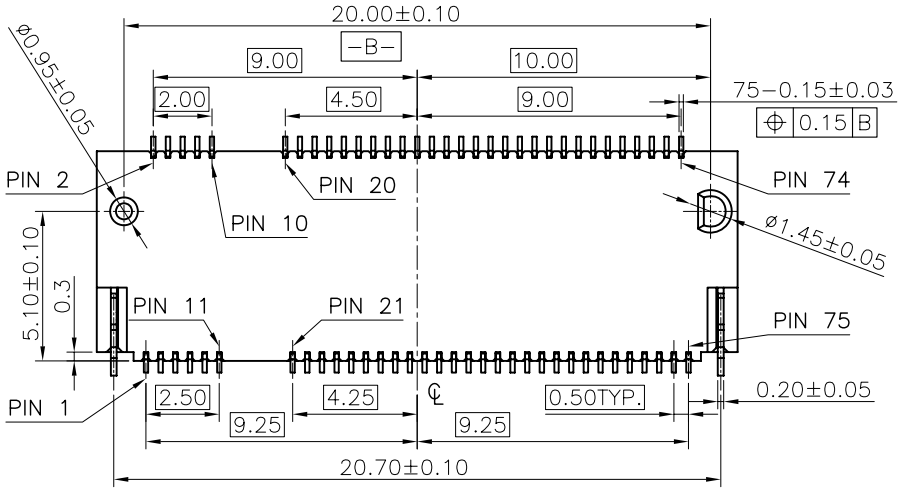

Notes:

1. MATERIAL SPECIFICATION:
   1.1. HOUSING:LCP+40%GF,UL94V-0,COLOR:BLACK.
   1.2. CONTACT:COPPER ALLOY .
   1.3. PEG:S50C.

2. PLATING SPECIFICATION:
   2.1. CONTACT:50u" MIN.NICKEL UNDER PLATING
   OVER ALL.PLATING ON SOLDER AREA:SEE TABLE
   GOLD PLATING ON CONTACT AREA:SEE TABLE
   2.2. PEG:50u" MIN. NICKEL UNDER PLATING OVER ALL.
   80u" MIN. MATTE TIN PLATING ON SOLDER AREA.

3. HF COMPLIANT, RoHS COMPLIANT.

4. DATE CODE: XX XX XX
   DAY
   WEEK
   YEAR

5. MECHANICAL PERFORMANCE:
   5.1. DURABILITY: SEE TABLE

6. ELECTRICAL PERFORMANCE:
   6.1. CURRENT: 0.5A PER PIN.
   6.2. LLCR: INITIAL 55mΩ MAX.;FINAL △LLCR=20mΩ MAX.

7. IR REFLOW:
   THE TEMPERATURE SHALL BE 260±5°C MAINTAINING 10±1 SECONDS.

深圳市敏连达科技有限公司 Shenzhen Minlianda Technology Co.,Ltd.			品名(ITEM NO)	NGFF M.2 B KEY 4.2H	
			料号(PART NO)	MLD-NGFF-B-4.2H	
单位(UNIT): MM	未注公差 TOLERANCE UNSPECIFIED X.X ± 0.38 X.XX ± 0.20 X.XXX ± 0.10 X° ± 5' X.X° ± 2'	版次(REV): A/0	页次(PAGE):1/1	设计 (DESIGN)	柯南
比例(SCALE) 1:1		模号(MODEL NO)		审核 (CHECKED)	邱敏
		图号(DWG NO)	MLD-2509031032	核准(APPROVED)	陈镇

RoHS Compliant

Assembly stack height schematic diagram

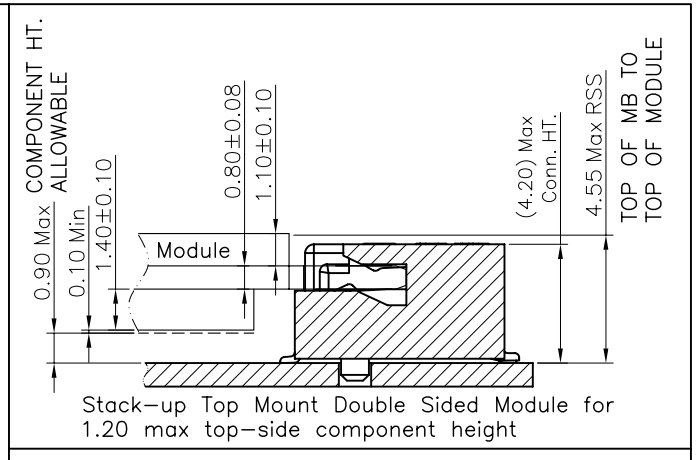

Stack-up Top Mount Double Sided Module for 1.20 max top-side component height

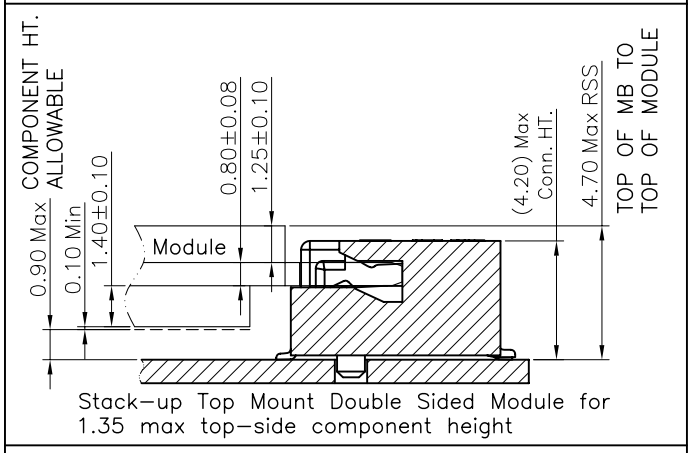

Stack-up Top Mount Double Sided Module for 1.35 max top-side component height

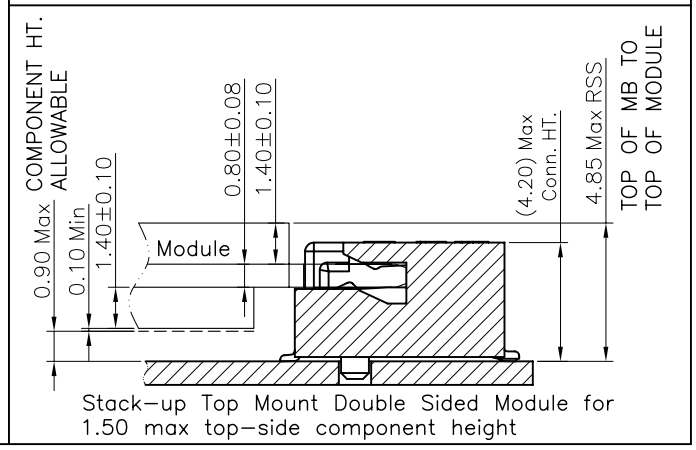

Stack-up Top Mount Double Sided Module for 1.50 max top-side component height

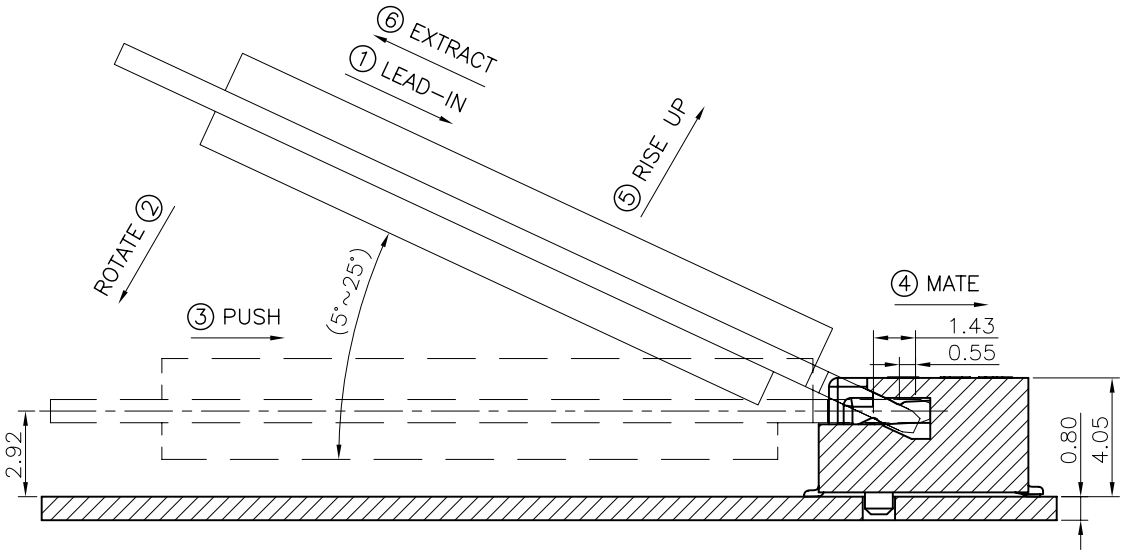

HOW TO MATE AND EXTRACT

MATE: ① → ④

EXTRACT: ⑤ → ⑥

NOTE:Mating force will generate from step 3 to step 4.

深圳市敏连达科技有限公司 Shenzhen Minlianda Technology Co.,Ltd.			品名(ITEM NO)	NGFF M.2 B KEY 4.2H	
			料号(PART NO)	MLD-NGFF-B-4.2H	
单位(UNIT): MM	未注公差 TOLERANCE UNSPECIFIED: X.X ± 0.38; X.XX ± 0.20; X.XXX ± 0.10; X° ± 5'; X.X° ± 2'	版次(REV): A/0	页次(PAGE):1/1	设计 (DESIGN)	柯南
比例(SCALE) 1:1		模号(MODEL NO)		审核 (CHECKED)	邱敏
		图号(DWG NO)	MLD-2509031032	核准(APPROVED)	陈镇

RoHS Compliant

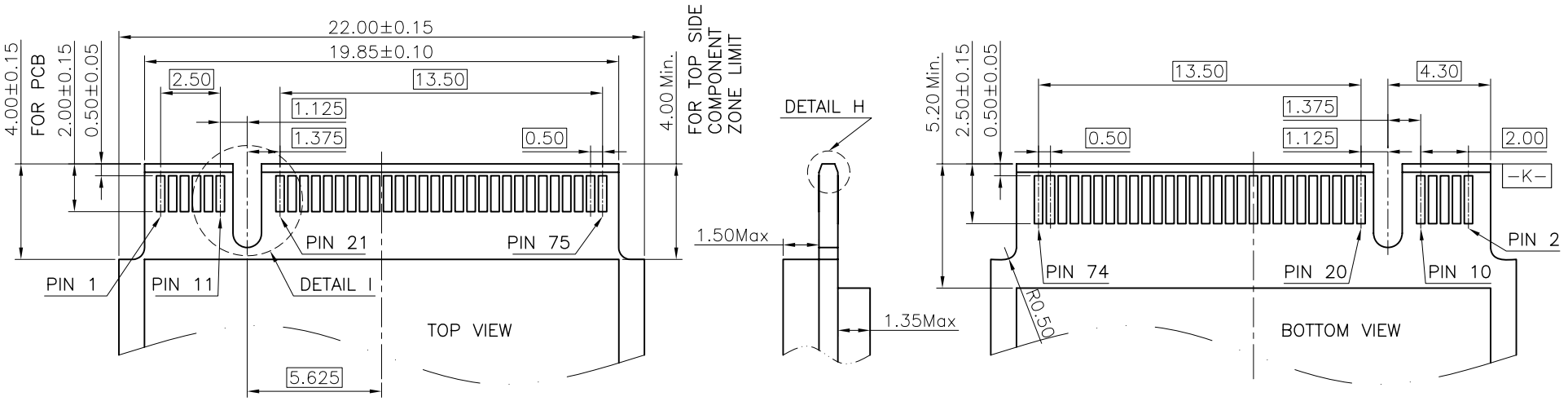

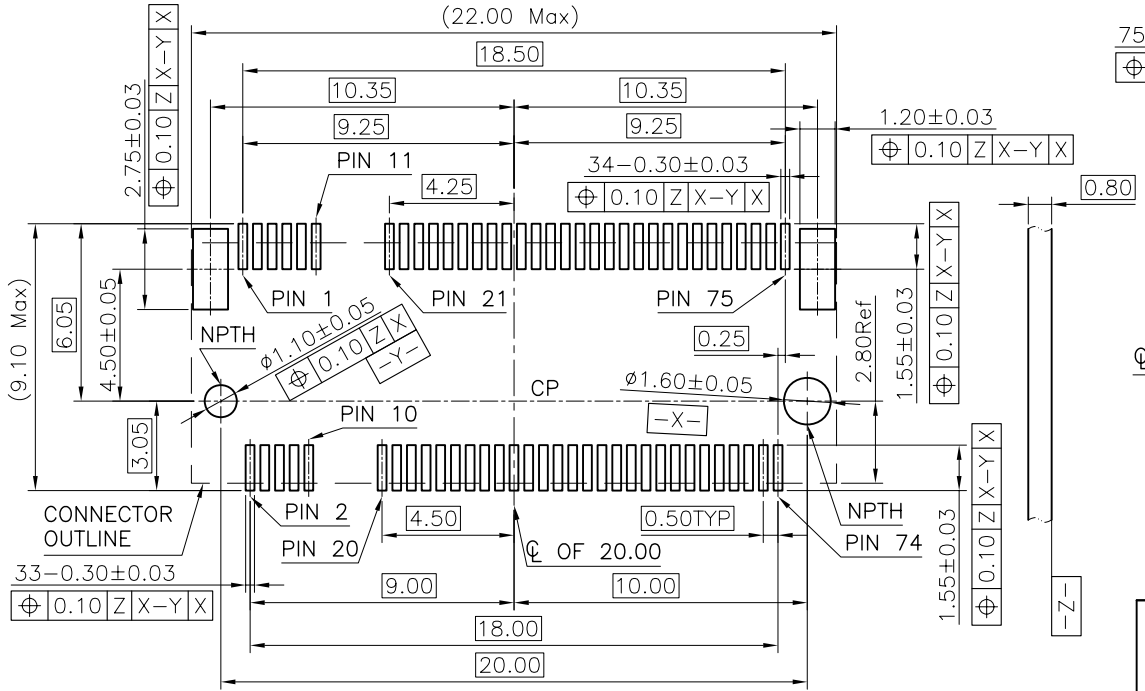

RECOMMENDED PCB LAYOUT(TOP VIEW)

DEFAULT TOLERANCE ±0.05MM

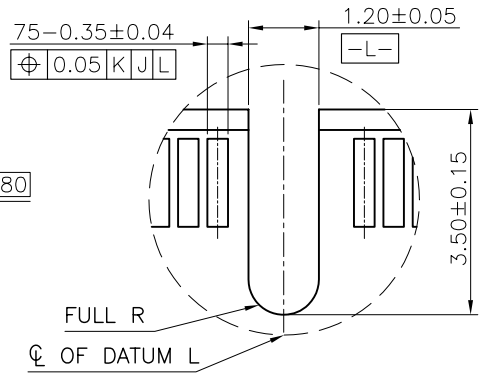

DETAIL I

SCALE 2:1

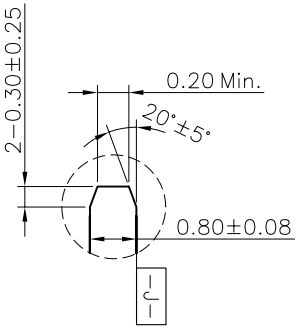

DETAIL H

SCALE 2:1

深圳市敏连达科技有限公司 Shenzhen Minlianda Technology Co.,Ltd.			品名(ITEM NO)	NGFF M.2 B KEY 4.2H	
			料号(PART NO)	MLD-NGFF-B-4.2H	
单位(UNIT): MM	未注公差 TOLERANCE UNSPECIFIED: X.X ± 0.38; X.XX ± 0.20; X.XXX ± 0.10; X° ± 5'; X.X° ± 2'	版次(REV): A/0	页次(PAGE):1/1	设计 (DESIGN)	柯南
比例(SCALE) 1:1		模号(MODEL NO)		审核 (CHECKED)	邱敏
		图号(DWG NO)	MLD-2509031032	核准(APPROVED)	陈镇