RoHS

REV.	ECN. #	DESCRIPTION	NAME	DATE
A0	———	NEW RELEASE	X. F. Wang	2024. 07. 05

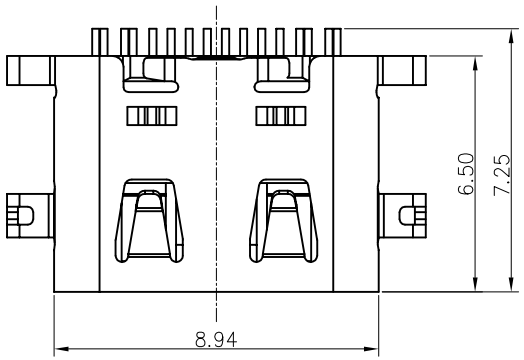

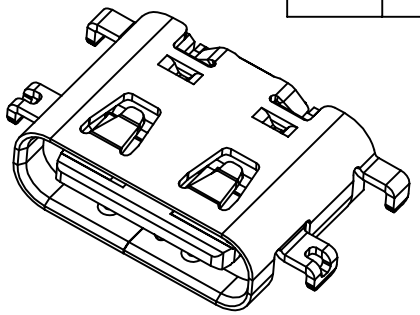

3D VIEW

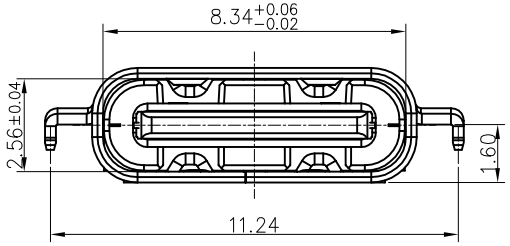

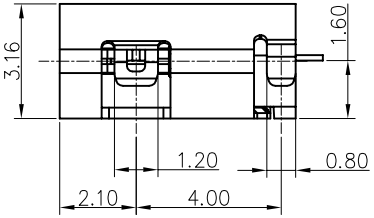

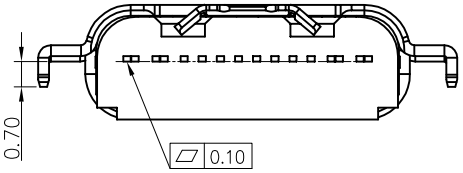

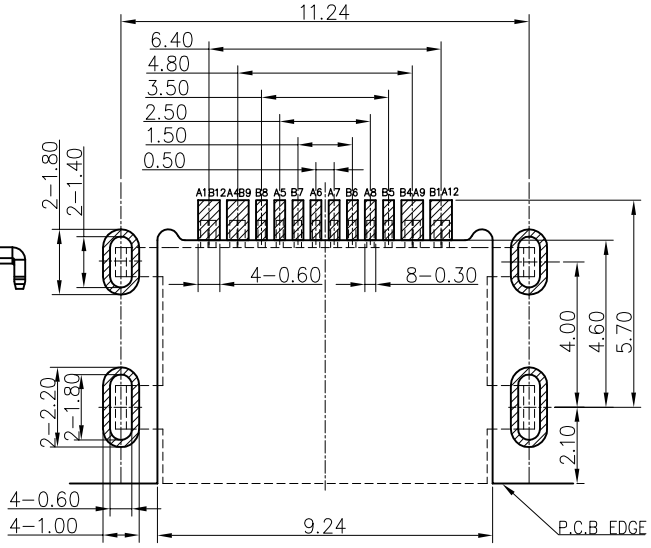

RECOMMENDED P.C.B. LAYOUT
TOLERANCE UNSPECIFIED ±0.05mm

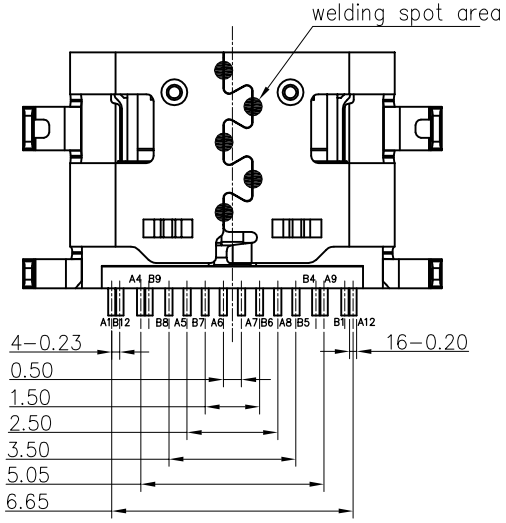

NOTES:
1.MATERIAL:
- 1.1 HOUSING: PA10T UL94V−0 ; COLOR: BLACK
- 1.2 CONTACT: C18400
- 1.3 SHELL: SUS304
- 1.4 MID PLATE: SUS301

2.FINISH:
- 2.1 CONTACT: Au 1u" Min. PLATING ON CONTACT AREA; Au 1u" Min. ON SOLDER TAIL; Ni ALL OVER.
- 2.2 SHELL: Ni 50u" Min. UNDER PLATED OVER ALL.
- 2.3 MID PLATE: CLEAN.

3.ELECTRICAL:
- 3−1.CURRENT RATING: 5.0A Max.
- 3−2.INSULATION RESISTANCE: 100 MEGAOHMS Min.
- 3−3.DIEELECTRIC WITHSTANDING VOLTAGE: 100VAC Min.
- 3−4.LOW LEVEL CONTACT RESISTANCE: INITIAL 40mΩ Max., AFTER 50mΩ Max.

4.MECHANICAL CHARACTERISTICS:
- 4−1.INSERTION FORCE:: 5~20N
- 4−2.EXTRACTION FORCE: 8~20N(INITIAL); 6~20N(AFTER TEST)
- 4−3.DURABILITY: 10000 CYCLES.

5. ENVIRONMENTAL SPECIFICATION:
- 5−1.OPERATING TEMPERATURE: −40°C TO +75°C Humidity 80% R.H M.
- 5−2 SALT SPRAY: 24H

PIN ASSIGNMENTS:

A1	A2	A3	A4	A5	A6	A7	A8	A9			A12
GND			VBUS	CC1	D+	D−	SBU1	VBUS			GND
B12			B9	B8	B7	B6	B5	B4			B1
GND			VBUS	SBU2	D−	D+	CC2	VBUS			GND

MILLIMETERS	INCH
X. ° ±2°	X. ° ±2°
. X ±0. 30	. X ±0. 012
. XX ±0. 20	. XX ±0. 008
. XXX ±0. 10	. XXX ±0. 004

THESE DRAWINGS AND SPECIFICATIONS ARE THE PROPERTY OF DongGuan Jinbilai Hardware Alwayseal Technology Co., Ltd COPIED OR USED IN ANY MANNER WITHOUT THE PRIOR WRITTEN CONSENT OF DongGuan Jinbilai Hardware Alwayseal Technology Co., Ltd

东莞市金比莱五金塑胶科技有限公司
DongGuan Jinbilai Hardware Alwayseal Technology Co., Ltd

TITLE	Type-C 16PIN Sink Plated 1.6 Shell Welding				DR	
PART NO.	1043111472-H				CHKD	
PRO J.	PAGE	1/2	UNITS	mm	APPD	
	SIZE	A4	SCALE	1:1	DIS NO.	UC029-03H客户图

RoHS

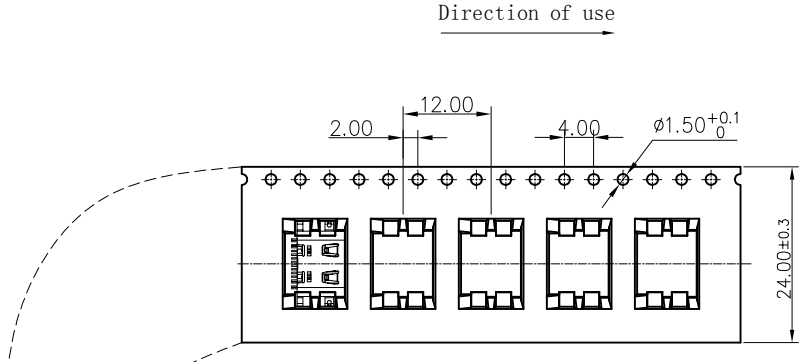

NOTES:

1、Packing quantity per plate: 1400PCS/Plate

2、Loading and packing method

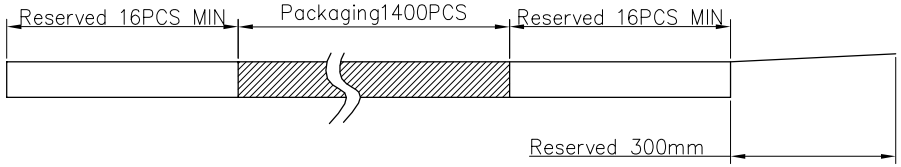

3、Total packaging:14000PCS/Box

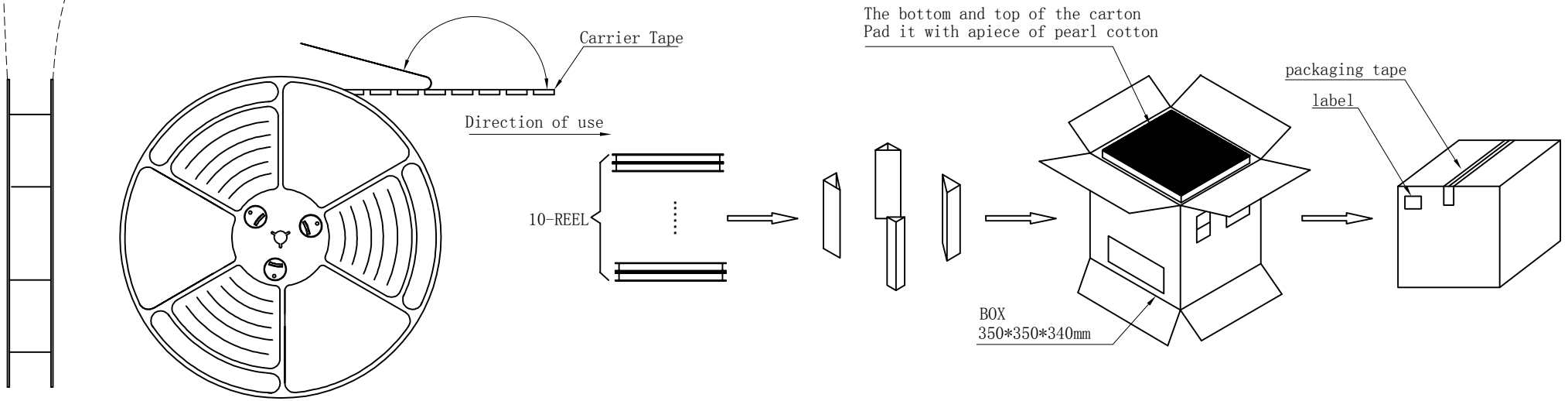

Part Number	Description	Quantity
303020188	Carrierband (Lucent, PET W=24 PH=12,T=0.35)	171.84M
303040009	Box (K=K,T=7.0,350*350*340)	1PCS
303060001	PE Bag (T=0.08mm, 730*760*730)	1PCS
303070024	Self-adhesive (W=21.30)	174.84M
303110001	Beam (K=K, T=7.0,95*95*290)	4PCS
303130001	Pearl Wool (340*340*18)	2PCS
303180017	REEL (BLUE, 13Inches*24mm, ϕ330)	10PCS
1043111472-H	Type-C 16PIN Sink Plated 1.6 Shell Welding	14000PCS

MILLIMETERS		INCH	
X.°	±2°	X.°	±2°
.X	±0.30	.X	±0.012
.XX	±0.20	.XX	±0.008
.XXX	±0.10	.XXX	±0.004

THESE DRAWINGS AND SPECIFICATIONS ARE THE PROPERTY OF DongGuan Jinbilai Hardware Alwayseal Technology Co.,Ltd COPIED OR USED IN ANY MANNER WITHOUT THE PRIOR WRITTEN CONSENT OF DongGuan Jinbilai Hardware Alwayseal Technology Co.,Ltd

东莞市金比莱五金塑胶科技有限公司

DongGuan Jinbilai Hardware Alwayseal Technology Co.,Ltd

TITLE	Type-C 16PIN Sink Plated 1.6 Shell Welding				DR	
PART NO.	1043111472-H				CHKD	
PRO J.	PAGE	2/2	UNITS	mm	APPD	
	SIZE	A4	SCALE	1:1	DIS NO.	UC029-03H客户图