规格承认书

SPECIFICATION FOR APPROVAL

客　　户

CUSTOMER

品　　名

PARTS　　固态铝电解电容器

产品型号

MODEL NO

编　制 PREPARED BY	审　核 CHECKED BY	批　准 APPROVED BY
平磊	宋小根	路康平

承认栏 APPROVAL

南京永立电子有限公司

NANJING WINNER ELECTRONICS CO.,LTD

地址：南京市江宁高新园天册路 6 号
电话：0086-025-52629165、52616232
传真：0086-025-52606611
邮编：211103

文件内容修改历史记录
RECORD OF REVISION

生效版本 REV. NO.	变更原因 REASON	修改内容 CONTENTS	承认时间 DATE OF	拟制 CHECKED	备注 REMARKS
1	客户要求	新项目送样	2022-11-22	平磊	
2					
3					
4					
5					
6					
7					
8					
9					
10					
11					
12					
13					
14					
15					
16					
17					
18					
19					
20					

Parts list &Characteristics 物料清单及特性

Part NO. 料号	SPECIFICATION 规格	Size (mm) D*L 尺寸	Cap. Tol ±(%)	Tan δ 损耗	Lu(μA) 漏电流	ESR(mΩ) 25℃ 100KHz	Ripple Current 纹波电流（mA) 105℃ 100KHz	LEAD STYLE 引脚形式/印字
1010250608R00	25V100UF	6.3*8	20	0.12	500	35	3200	散料长脚/红字
1026R30610R00	6.3V1000UF	6.3*10	20	0.08	1260	13	4500	散料长脚/红字
1026R30809R00	6.3V1000UF	8*9	20	0.08	1260	13	5000	散料长脚/红字
1026R30812R00	6.3V1000UF	8*12	20	0.08	1260	13	5500	散料长脚/红字
3310160509R00	16V330UF	5.5*9	20	0.08	1056	25	3000	散料长脚/红字
3310160512R00	16V330UF	5.5*12	20	0.08	1056	25	3200	散料长脚/红字
3310250612R00	25V330UF	6.3*12	20	0.12	1650	35	3500	散料长脚/红字
3316R30605R00	6.3V330UF	6.3*5	20	0.08	415.8	25	4000	散料长脚/红字
4700250508R00	25V47UF	5*8	20	0.12	300	35	2800	散料长脚/红字
4710160512R00	16V470UF	5.5*12	20	0.10	1504	25	3200	散料长脚/红字
4710160812R00	16V470UF	8*12	20	0.10	1504	15	3800	散料长脚/红字
4710250612R00	25V470UF	6.3*12	20	0.12	2350	35	3800	散料长脚/红字
4710250614R00	25V470UF	6.3*14	20	0.12	2350	35	3800	散料长脚/红字
4716R30509R00	6.3V470UF	5*9	20	0.08	592.2	25	3500	散料长脚/红字
5610160612R00	16V560UF	6.3*12	20	0.10	1792	15	3800	散料长脚/红字
5610160812R00	16V560UF	8*12	20	0.10	1792	15	5000	散料长脚/红字
5610250616R00	25V560UF	6.3*16	20	0.12	2800	35	3800	散料长脚/红字
6810161010R00	16V680UF	10*10	20	0.10	2176	15	5200	散料长脚/红字
6810250814R00	25V680UF	8*14	20	0.12	3400	35	4200	散料长脚/红字
6810250816R00	25V680UF	8*16	20	0.12	3400	35	4200	散料长脚/红字
6816R30608R00	6.3V680UF	6.3*8	20	0.08	856.8	13	4500	散料长脚/红字
8217R50609R00	7.5V820UF	6.3*9	20	0.08	1230	15	4500	散料长脚/红字

一、概述　SCOPE

本产品规格书适用于南京永立电子有限公司 PC 型固态铝电解电容器产品。

The product specification is adapted to series PC Conductive Polymer Aluminum Electrolytic Capacitorsof =NANJING WINNER ELECTRONICS CO.,LTD

二、外形图及尺寸表　Case size table

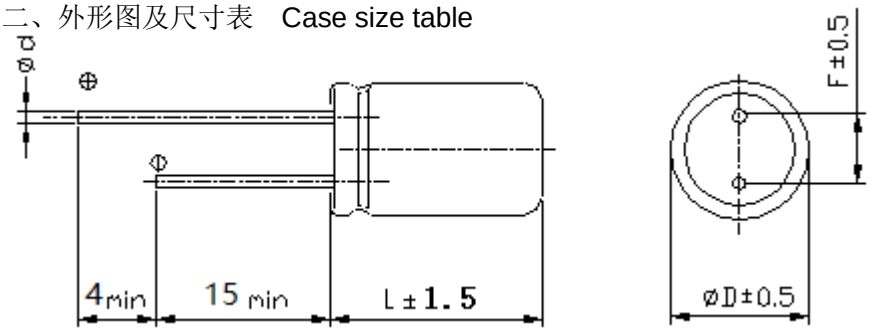

ΦD	5	5.5	6.3	8	10
F(±0.5)	2.0	2.5	2.5	3.5	5.0
d(±0.05)	0.5	0.5	0.6	0.6	0.6

三、技术性能 Specifications

<table>
<tr><td>1</td><td>系列号(SERIES)</td><td colspan="2">PC 系列(PC　SERIES）</td></tr>
<tr><td>2</td><td>额定电压
(rated voltage)</td><td colspan="2">2.5V~25V</td></tr>
<tr><td>3</td><td>工作温度范围
Operating temperature
range operating</td><td colspan="2">工作温度范围是指电容器在额定电压下能持续工作的所允许外部环境的温度范围
operating temperature range is the range of ambient temperature at which the　capacitor can be operated continuously at rated voltage
SPEC:-55~+105℃</td></tr>
<tr><td rowspan="5">4</td><td rowspan="5">电容容量
capacitance</td><td colspan="2"></td></tr>
<tr><td>测量温度 20℃</td><td>measuring temperature</td></tr>
<tr><td>测量频率 120HZ</td><td>measuring frequency</td></tr>
<tr><td>测量电压 0.5Vrms</td><td>measuring voltage</td></tr>
<tr><td>标称电容量允许偏差:-20+20% MAX</td><td>Nominal Capacitance Tolerance:-20+20% MAX</td></tr>
<tr><td>5</td><td>损耗角正切
tangent of the loss angle</td><td colspan="2">损耗角正切的测量应要和测量电容容量一样的条件下进行
Measurement should be made under the same conditions as those given for the measurement of capacitance
SPEC：
<table>
<tr><td rowspan="2">损耗角正切（tgδ）</td><td>U_R (V)</td><td>2.5</td><td>4</td><td>6.3</td><td>10</td><td>16</td><td>20</td><td>25</td></tr>
<tr><td>tgδ</td><td colspan="7">参考目录规格</td></tr>
</table></td></tr>
</table>

<table>
<tr><td>6</td><td>漏电流
leakage current</td><td>将额定电压加在电容和 1000±100Ω的保护电阻上。在充电 2 分钟后，按下列等式计算漏电流
the rated voltage shall be applied across the capacitor and its protective resistor which shall be 1000±100Ω.The leakage current shall be then measured after an electrifications period of (A)min. The leakage current shall be calculated by the following equation
在加上额定电压一定时间后， 应满足下列要求：I≤0.2CV or 200μA Which is greater(取较大者）（20℃，2 分钟）
SPEC: The following specifications shall be satisfied when the rated voltage is applied for the required time.</td></tr>
<tr><td rowspan="4">7</td><td rowspan="4">等效串联阻抗
Equivalent Series Resistance
（ESR）</td><td colspan="2"></td></tr>
<tr><td>测量温度 20℃</td><td>measuring temperature</td></tr>
<tr><td>测量频率 100KHZ</td><td>measuring frequency</td></tr>
<tr><td>测量电压 0.5Vrms</td><td>measuring voltage</td></tr>
<tr><td>8</td><td>允许最大纹波电流
Maximum permissible ripple current</td><td>在规定的某一频率下的最大交流电流，在该电流下电容器连续工作。即使在测过耐久性后，此要求仍要满足。在此，DC 电压加上最大纹波电压小于等于额定电压。
The maximum sinusoidal alternating current of a frequency specified below, at which the capacitor can be operated continuously. This requirement shall be satisfied even after the measurement electrical endurance Where(DC voltage +peak ripple voltage)≤rated voltage
<table>
<tr><td>Frequency</td><td>120Hz≤freq.<1KHz</td><td>1KHz≤freq.<10KHz</td><td>10KHz≤freq.<100KHz</td><td>100KHz≤freq.<500KHz</td></tr>
<tr><td>Coefficient</td><td>0.05</td><td>0.3</td><td>0.7</td><td>1</td></tr>
</table></td></tr>
</table>

四、试验方法及要求 Tests

1 浪涌测试 Surge test

在规定温度下，循环测试 1000 次，每次充电 30±5 秒，再放电大约 5 分 30 秒。在标准温度条件下存放使其稳定，然后测试。

The capacitor shall be subjected to 1000cycles at a temperature specified below, each consisting of a charge period of 30±5sec, followed by a discharge period of approx. 5min30sec. And the capacitor shall be stored under standard conditions thermal to obtain stability,after which measurements shall be made.

measurement circuit(测试电路图）

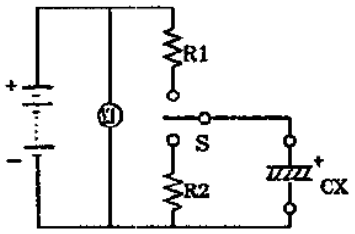

VZ:浪涌电压 Surge voltage	V1:直流电压 DC voltmeter
R1:保护电阻（1KΩ） Protective series	R2:放电电阻器 Discharge resistor
CX:测试电容 Test capacitor	S:开关 Switch

SPEC: 1) 电容量变化 Change in capacitance: ±10%初始值以内 Within±10% of the initial value

2）损耗角正切 tangent of the loss angle: 小于等于初始规定值 The initial specified value or less

3）ESR（equivalent series resistance）：小于等于初始规定值 The initial specified value or less

4) 漏电流 leakage current：小于等于初始规定值 The initial specified value or less

电压设定

RATED VOLTAGE(V_{DC})	2.5	4	6.3	10	16	20	25
SURGE VOLTAGE(V_{DC})	2.8	4.6	7.2	11.5	18.4	23	27.5

2 端子强度 Terminal strength

1） 拉力(tensile）

d(mm)	[N]	Duration time
0.3<d≤0.5	5	10±2sec(秒）
0.5<d≤0.8	10	

2）抗弯强度（Bending）

端子应该在每一方向上折弯一次，总共两次

The terminal shall be subjected to 1 bend in each direction to give a total 2 bends.

d(mm)	[N]
0.3<d≤0.5	2.5 (0.25KG)
0.5<d≤0.8	5.0 (0.51KG)

端子没有破损或松动 SPEC: No breaking and loosening of terminal

3 可焊性 solderability

焊料(Solder）：H60A. H60S or(或)H63A

焊接温度(Solder temperature）：245±2℃

浸入时间(Immersion time）：3±0.5sec(秒）

浸入深度(Immersion depth）：离本体 1.5~2mm

熔化：松香在酒精的浓度是 25%

		Flux：25％ by weight of rosin in ethanol 从含浸处到顶部，至少要有 3/4 的部分覆盖有新焊料 SPEC:1)3/4 of the circumference of the surface up to the immersed shall be covered with new solder.
4	耐焊接热 Resistance to soldering heat	焊料(Solder）：H60A. H60S or(或)H63A 焊槽温度(Solder temperature）：260±5℃(or 或 350±10℃ 浸入时间(Immersion time）：10±1sec(秒）（or 或 3.5±0.5sec） 绝热屏蔽板的厚度（Thickness of heat shunt:1.6mm）：1.6mm SPEC: 1) 电容量变化 Change in capacitance: ±10%初始值以内 Within±10% of the initial value 2）损耗角正切 tangent of the loss angle: 小于等于初始规定值 The initial specified value or less 3）ESR（equivalent series resistance）：小于等于初始规定值 The initial specified value or less 4) 漏电流 leakage current：小于等于初始规定值 The initial specified value or less
5	标志耐溶剂性	标志应清晰可见 试剂:异丙醇 试验温度:20~25℃ 浸入时间:30±5S
6	高温高湿 Dampheat, steady state	电容器要在温度 60±2℃，相对湿度 90％到 95％条件下存放 240±8 个小时。然后在标准条件下放 1 到 2 小时后进行测量。 the capacitor shall be stored at a temperature of 60±2℃ and relative huidity of 90 to 95% for 240±8hours。And then the capacitor shall be subjected to standard atmospheric conditions for 1 to 2hours, after which measurements shall be made SPEC: 1) 电容量变化 Change in capacitance: ±20%初始值以内 Within±20% of the initial value 2）损耗角正切 tangent of the loss angle: 150%初始规定值以内 within 150%of the initial value 3）ESR（equivalent series resistance）：150%初始规定值以内 within 150%of the initial value 4）漏电流 leakage current：小于等于初始规定值 The initial specified value or less
7	高温储存 shelf life	在+105℃温度下不外加电压贮存，电容器存放 1000 小时。然后在标准条件下放 1 到 2 小时后进行测量，并且在测漏电流前，必须满足下列条件。 The capacitor shall be stored at +105℃ temperature specified below for1000hours.During which time no voltage shall be applied. And then the capacitor shall be sujected to standard atmospheic conditions for 1 to2hours, after which measurements shall be made, Prior to the measurement of leakage current, following conditioning may be made. SPEC: 1) 电容量变化 Change in capacitance: ±20%初始值以内 Within±20% of the initial value 2）损耗角正切 tangent of the loss angle: 200%初始规定值以内 within 200%of the initial value 3）ESR（equivalent series resistance）：200%初始规定值以内 within 200%of the initial value 4）漏电流 leakage current：小于等于初始规定值 The initial specified value or less
8	耐久性 load life	在+105℃下，电容器施加带额定纹波电流的额定电压 2000 小时。在标准条件下放 1 到 2 小时后进行测量。 The rated voltage with specified ripple current shall be applied continuously to the capacitor at maximum operating temperature +105℃ for 2000 hours. And then the capacitor shall be subjected to standard atmospheric conditions for 1to 2hours, after which measurement shall be made. SPEC: 1) 电容量变化 Change in capacitance: ±20%初始值以内 Within±20% of the initial value 2）损耗角正切 tangent of the loss angle: 200%初始规定值以内 within 200%of the initial value 3）ESR（equivalent series resistance）：200%初始规定值以内 within 200%of the initial value 4）漏电流 leakage current：小于等于初始规定值 The initial specified value or less

9	温度循环试验 Rapid temperature change	电容器要图一的温度循环要求下保持 5 个循环。然后在标准条件下放 1 到 2 小时后进行测量。 The characteristics of a capacitor kept under the temperature cycle indicated in Figure1 for 5 cycles . And then the capacitor shall be subjected to standard atmospheric conditions for 1to 2hours, after which measurement shall be made. 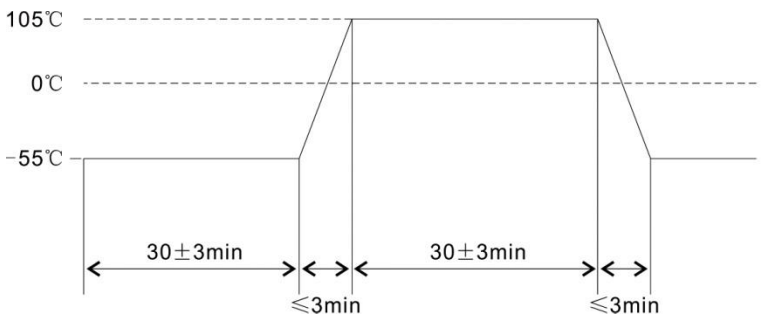 Figure.1 SPEC: 1) 电容量变化 Change in capacitance: ±10%初始值以内 Within±10% of the initial value 2）损耗角正切 tangent of the loss angle: 小于等于初始规定值 The initial specified value or less 3）ESR（equivalent series resistance）：小于等于初始规定值 The initial specified value or less 4）漏电流 leakage current：小于等于初始规定值 The initial specified value or less
10	低温试验 Low temperature test	电容器要在温度-55℃条件下存放 72±2 个小时。然后在标准条件下放 1 到 2 小时后进行测量。 the capacitor shall be stored at a temperature of -55℃ for 72±2hours。And then the capacitor shall be subjected to standard atmospheric conditions for 1 to 2hours, after which measurements shall be made SPEC: 1) 电容量变化 Change in capacitance: ±10%初始值以内 Within±10% of the initial value 2）损耗角正切 tangent of the loss angle: 小于等于初始规定值 The initial specified value or less 3）ESR（equivalent series resistance）：小于等于初始规定值 The initial specified value or less 4）漏电流 leakage current：小于等于初始规定值 The initial specified value or less

五、结构图 Frame drawing

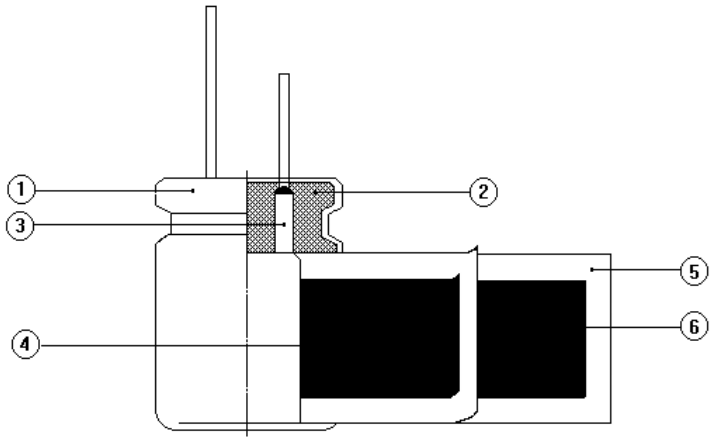

序号 No.	部件名称 Parts	材料名称 Material	主要供应厂家名称 Main supply Factory
1	PE 铝壳 PE- CASE	99.5%纯度铝 AL －99.5%	安徽群盛电子有限公司 ANHUI QUNSHENG ELECTRONIC CO., LTD

2	橡胶塞 Sealing Material	橡胶 rubber	玉环鑫庄电子股份有限公司 YUHUANG XINZHUANG ELECTRONIC CO., LTD 苏州毅丰橡胶工业有限公司 YUFENG RUBBER INDUSTRY CO,LTD.
3	引出线 Lead	铝线+镀锡铜钢线 AL- wire +Tin- plating of copper cover steel	张家港洪兴电子有限公司 ZHANGJIAGANG HONGXING ELECTRONIC CO., LTD
4	正极箔 AL–foil(+)	99.99%或 99.98%形成铝箔 Formed AL 99.98% or 99.98%	扬州宏远电子有限公司 Yangzhou HongYuan Electronic Co., Ltd
5	电解纸 Separstor paper	电解电容器纸 Electrolytic Capacitor paper	仙鹤股份有限公司 XIANHE CO.,Ltd
6	负极箔 AL–foil(-)	99.7%铝箔 Etched AL 99.7%	苏州升维电子科技有限公司 SUZHOU SHENGWEI ELECTRONIC TECHNOLOGY CO. LTD
7	电解质 Electrolyte	聚合物 Conductive Polymer	深圳新宙邦科技股份有限公司 SHENZHEN CAPCHEM TECHNOLOGY Co., Ltd

六、标志 Marking

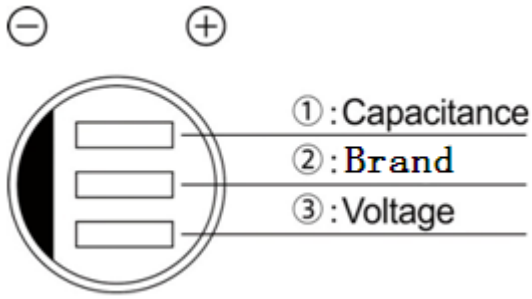

1,	代表容量 Rate Capacitance
2,	代表商标 Rate Brand
3,	代表电压 Rate Voltage

七、编带形状及尺寸 Taping of Aluminum Electrolutic Capacitor and size

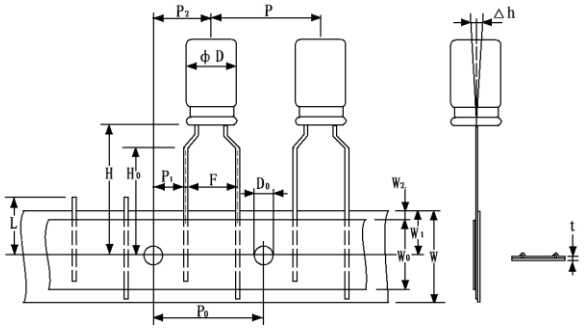

Fig1

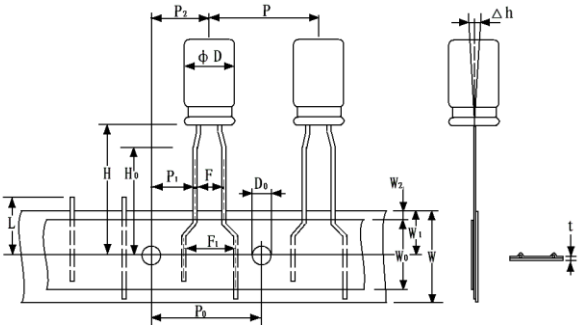

Fig2

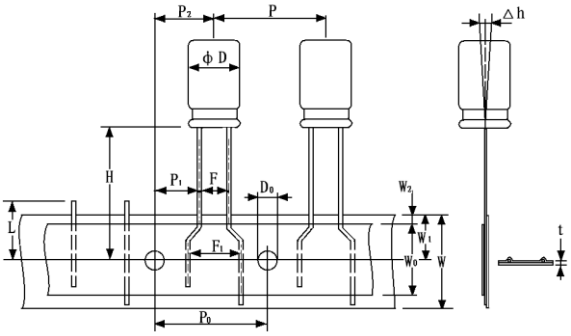

Fig3

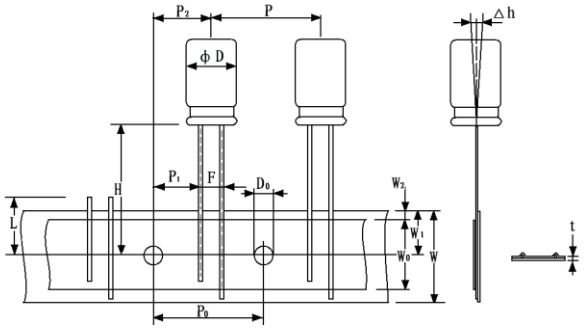

Fig4

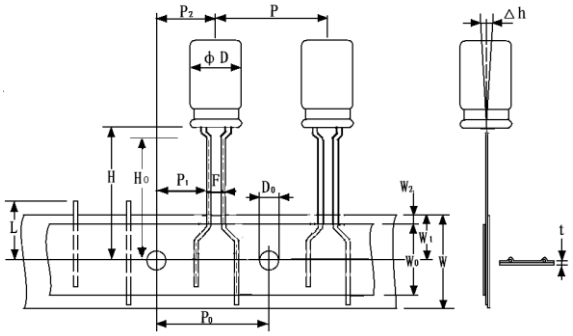

Fig5

mm

Symbl	Case Size				TOL	Remark
ΦD	5	6.3	8	10		
P	12.7				±1.0	
P_0	12.7				±0.2	
P_1	3.85				±0.7	Fig1. Fig 4
			4.6			Fig 4
	5.1					Fig 2. Fig 3. Fig 5
P_2	6.35				±1.0	
F	5.0				+0.8 -0.2	Fig 1. Fig 4
			3.5			Fig 4
	2.5					Fig 2: Φ5 Fig 3: Φ6.3 Fig 5: Φ8
W	18.0				±0.5	
W_0	10.0				min	
W_1	9.0				±0.5	
W_2	1.5				max	

H	18.5	±0.5	
H_0	16.0	±0.5	
D_0	4.0	±0.3	
L	11.0	max	
t	0.6	±0.3	
Δh	0	±2.0	

八、铝电解电容器的使用注意事项 Guidelines For Using Aluminum Electrolytic Capacitor

为使您获得电解电容器的最佳性能和延长电解电容器的使用寿命，在使用电解电容器前，请务必阅读本注意事项。

Upon using Aluminum Electrolytic Capacitors，please proper handing and observing to following important points will insure optimum capacitor performance and long life.

1．直流电解电容器是有极性的 DC electrolytic capacitors are polarized.

确定极性，极性标志在电容器的基体上。以免因极性反可能引起电路短路或电容器损坏，当极性不固定或不确定的，使用双极性电容器。注意直流电解电容器不能使用于交流。

Make sure of the polarity. The polarity is marked on the body of the capacitor .Application of the reversed voltage cause a short circuit or damage to the capacitor. Use bipolar capacitors when the polarity is not determined or unknown. Note that DC electrolytic capacitors can not be used for AC application.

2．使用电压不要大于额定电压 Do not apply voltage greater than rated voltage.

使用电压大于额定电压，漏电流会增大，可能损坏电容器。建议工作电压为额定电压的百分之七十～八十，电容器在建议的工作电压下使用可延长电容器的寿命。

If a voltage exceeding the rated voltage is applied, the leakage current will increase, which damage the capacitor. Recommended working voltage is 70 to 80 percent of tatted voltage. Using capacitors at recommended working voltage prolongs capacitor life.

3．不要使过量的纹波电流通过电容器 Do not allow excessive ripple current through the capacitor.

流过电容器的纹波电流超过许可值，将会引起电容器发热，电容量减少，损害电容器。通过电容器的纹波电流不要大于允许值。

The flow of ripple current over permissible ripple current will cause heat of the capacitor, which may decrease the capacitance and damage the capacitor. Ripple current on the capacitor must be at or bellow allowable level.

4．快速的充放电电路中，使用专门设计的电容器‘

Use specially designed capacitors for the circuits where charge and discharge are frequency repeated.

在经受快速的周期性充放电电路中，电容器可能受损害，它的寿命因容量下降、温升等原因而缩短，在这种电路中，一定要使用专门设计的电容器。

In the circuit subjected to rapid charge cycles, capacitors may be damaged, its life may be shortened by capacitance decrease, heat rise, ect. Be sure and use special capacitors in these applications.

5．工作温度范围 Operating temperature range.

电容器的特性随工作温度而变化，在温度较高的情况下，容量、漏电流增大，损耗减少；在低温情况下，容量和漏电流下降，损耗增大。电容器在较低的温度下使用会确保延长寿命。

The characteristics of capacitors change with the operating temperature. The capacitance and leakage current increase and tgδ decrease at higher temperatures. The capacitance and leakage current decrease and tgδ at increase lower temperature. Usage at lower temperature will ensure longer life.

6．核对工作频率 Check operating frequency.

电解电容器的容量通常是在 100Hz 或 120Hz 下测得的。然而要记住容量随频率的升高而下降，tg δ 随频率的升高而增大，并使周围温度升高。

The capacitance of electrolytic capacitors is usually measured at 100Hz or 120Hz. However, remember that capacitance decrease and tgδ increase as the applied frequency becomes higher whereas the ambient temperature becomes higher.

7．长时间存放的电容器，在使用前加额定直流电压处理

Apply rated DC voltage treatment to the capacitors which have been stored for a long time .

长时间的存放，实际对电容器的容量和 tg δ 没有多大的影响，然而往往会使漏电流增大，耐压降低。长时间存放后的电容器处理，首先逐渐施加直流电压至额定电压，然后再使用。

Long periods of storage have virtually no effect on a capacitor’s capacitance and tgδ. Such periods tend however, to increase leakage current and decrease withstand voltage. After removing capacitors from long-duration storage, first apply a gradually increasing DC voltage to rated voltage and then use them.

8．电容器外壳与阴极端是不绝缘的 The capacitor case is not insulated from the cathode terminal.

电容器外壳与阴极端是通过电解液连接的，如果电容器的外壳必须与线路绝缘，则电容器的安装位置处，一定要采取绝缘措施。

The capacitor’s case and cathode terminal connect through the electrolyte. If the case is to be completely insulated, that insulation must be at the capacitor’s mounting point.

9．电容器的端子或引线上不要施加过大的力

Do not apply excessive force to the terminals and leads.

过大的力施加到端子和引线上， 可能引起引线的断裂或端子分裂，转而会引起内部连接的破坏。

The excessive strong force applied to the terminals and lead wires may cause leads to break or terminals to separate and, in turn, cause the internal contact to fail.