POGO PIN | REAC/ROHS

| REV | ECN NO | DESRIPTION | DESIGN | APPROVAL | DATE |
|---|---|---|---|---|---|
| A1 | NEW | Replace frame | | | 2018.06.12 |
| | | | | | |

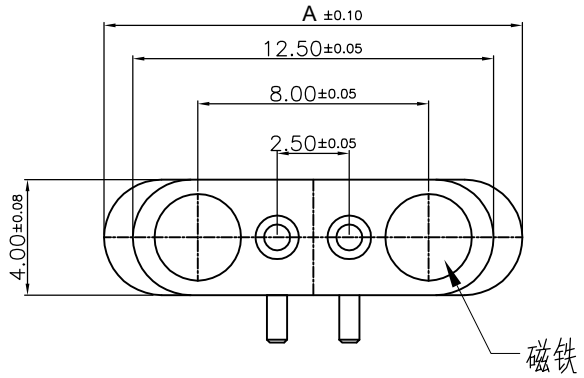


| SERIES | PIN NO | A:mm |
|---|---|---|
| PR5W5036-H | 2PIN | 14.50 |
| | 3PIN | 17.00 |
| | 4PIN | 19.50 |
| | 5PIN | 22.00 |
| | 6PIN | 24.50 |
| | 7PIN | 27.00 |
| | 8PIN | 29.50 |
| | 9PIN | 32.00 |
| | 10PIN | 34.50 |
| | 11PIN | 37.00 |
| | 12PIN | 39.50 |

otes:
Characteristics:
A. Material (材料)
1) Housing:High Plastic Black (UL94V-0)
2) Plunger:brass c3604
3) Barrel:brass c3604
4) Spring:Stainless steel wire.
B. Plating (电镀)
1) Plunger:Plating Min. 3u' Au over Min. 50u' Ni.
2) Barrel:Plating Min. 3u' Au over Min. 50u' Ni.
3) Spring:Plating Min. 1u' Au
C. Electrical (电器性能)
1) Operating voltage: 12V Max.
2) Opetating current: 2A Max.
3) Contact resistance: 30mohm Max. at working height(Quiescence).
D. Mechanical (机械性能)
1) Total stroke: 1.10mm.
2) Working height: 1.0mm.
3) Spring Force:45gf±10gf at working height
4) Mechanical life: 10,000 cycle min.
5) Don't exceed the Max. allowed compression
E. Environmental (工作环境)
1) Storage and operating temoperature range: -40°C~ +85°C
2) Humidity range: 10% RH to 90% RH
3) Salt spray: 48H
F. Others (其它)
1) The dimensions marked * are critical, Should be checked in production
2) RoHS compliant product.

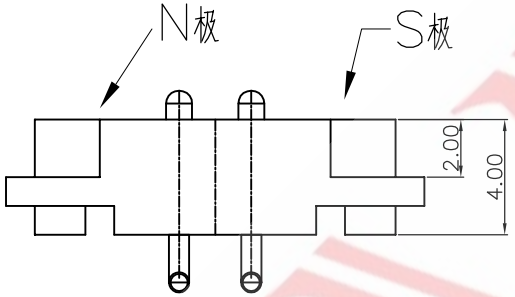


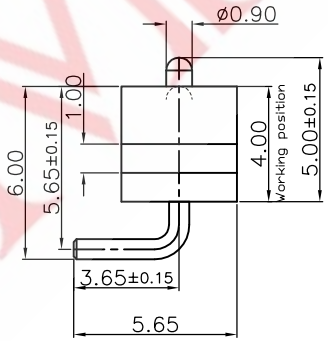


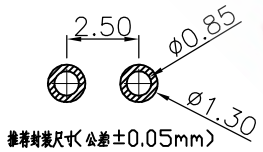


| | | | | |
|---|---|---|---|---|
| | | | GENERAL TOLERANCE | |
| | | | ≥0~2< | ±0.15 |
| DESIGN | WANGGUIFA | 2018.06.12 | ≥2~5< | ±0.25 |
| CHECKED | ZHENGUILAN | 2018.06.12 | ≥0~2< | ±0.15 |
| APPROVED | LILIANJIANG | 2018.06.14 | ≥5 | ±0.35 |

FIRST VIEW

SCALE 1:1 UNIT mm

The copyright belongs to samzo parts [China] Co., Ltd. please use the material after samzo parts agree to authorize. The final right of interpretation belongs to samzo parts.
WWW.KKK-JP.COM

SAMZO COMPONENTS
Electronic switch and connector manufacturer

TITLE:: 2.5PH 90度弯脚 PA4.0
DWG NO: GA02114-P001
PART NO: GA02114230614
MODEL NO: PR5W5036-NP-C-H
NAME: POGO PIN