MCV 0,5/10-G-2,54 P20 THR R56 - PCB header

1821478

https://www.phoenixcontact.com/us/products/1821478

Please be informed that the data shown in this PDF document is generated from our online catalog. Please find the complete data in the user documentation. Our general terms of use for downloads are valid.

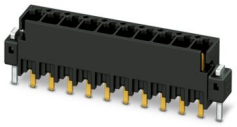

PCB headers, nominal cross section: 0.5 mm^2, color: black, nominal current: 6 A, rated voltage (III/2): 160 V, contact surface: Au, contact connection type: Pin, number of potentials: 10, number of rows: 1, number of positions: 10, number of connections: 10, product range: MCV 0,5/..-G-THR, pitch: 2.54 mm, mounting: THR soldering / wave soldering, pin layout: Linear pinning, solder pin [P]: 2 mm, number of solder pins per potential: 1, plug-in system: COMBICON FMC 0,5, Pin connector pattern alignment: Standard, locking: without, mounting method: without, type of packaging: 56 mm wide tape, Sample values available under SAMPLE MC...

Your advantages

- Designed for integration into the SMT soldering process
- Additional solder anchors reduce the mechanical strain on the soldering spots
- Gold-plated contacts ensure transfer quality remains stable over the long term
- Vertical connection enables multi-row arrangement on the PCB
- Supplied in tape-on-reel packing according to IEC 60286-3 for automated mounting

Commercial data

Item number	1821478
Packing unit	315 pc
Minimum order quantity	315 pc
Note	Made to order (non-returnable)
Sales key	AA01
Product key	AAATAB
Catalog page	Page 177 (C-1-2013)
GTIN	4046356789639
Weight per piece (including packing)	3.16 g
Weight per piece (excluding packing)	2.23 g
Customs tariff number	85366930
Country of origin	PL

Technical data

Product properties

Product type	PCB headers
Product family	MCV 0,5/..-G-THR
Product line	COMBICON Connectors XS
Type	Component suitable for through hole reflow
Number of positions	10
Pitch	2.54 mm
Number of connections	10
Number of rows	1
Number of potentials	10
Mounting flange	without
Pin layout	Linear pinning
Solder pins per potential	1

Electrical properties

Nominal current I_N	6 A
Nominal voltage U_N	160 V
Contact resistance	2.5 mΩ
Rated voltage (III/3)	32 V
Rated surge voltage (III/3)	2.5 kV
Rated voltage (III/2)	160 V
Rated surge voltage (III/2)	2.5 kV
Rated voltage (II/2)	160 V
Rated surge voltage (II/2)	2.5 kV

Mounting

Mounting type	THR soldering / wave soldering
Pin layout	Linear pinning

Processing notes

Process	Reflow/wave soldering
Moisture Sensitive Level	MSL 1
Classification temperature T_c	260 °C
Solder cycles in the reflow	3

Material specifications

Material data - contact

Note	WEEE/RoHS-compliant, free of whiskers according to IEC 60068-2-82/JEDEC JESD 201
Contact material	Cu alloy
Surface characteristics	Completely gold-plated
Metal surface contact area (top layer)	Gold (0.25 Au)

Metal surface contact area (middle layer)	Nickel (2 - 4 µm Ni)
Metal surface soldering area (top layer)	Gold (0.25 Au)
Metal surface soldering area (middle layer)	Nickel (2 - 4 µm Ni)

Material data - housing

Color (Housing)	black (9005)
Insulating material	LCP
Insulating material group	IIIa
CTI according to IEC 60112	175
Flammability rating according to UL 94	V0

Dimensions

Dimensional drawing	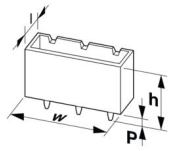
Pitch	2.54 mm
Width [w]	29.98 mm
Height [h]	9.1 mm
Length [l]	4.85 mm
Installed height	7.1 mm
Solder pin length [P]	2 mm
Pin dimensions	0.64 x 0.64 mm

PCB design

Hole diameter	1.2 mm

Mechanical tests

Visual inspection

Specification	IEC 60512-1-1:2002-02
Result	Test passed

Dimension check

Specification	IEC 60512-1-2:2002-02
Result	Test passed

Resistance of inscriptions

Specification	IEC 60068-2-70:1995-12
Result	Test passed

Polarization and coding

Specification	IEC 60512-13-5:2006-02
Result	Test passed

Contact holder in insert

Specification	IEC 60512-15-1:2008-05
Contact holder in insert Requirements >20 N	Test passed

Insertion and withdrawal forces

Result	Test passed
No. of cycles	100
Insertion strength per pos. approx.	2 N
Withdraw strength per pos. approx.	2 N

Electrical tests

Thermal test | Test group C

Specification	IEC 60512-5-1:2002-02
Tested number of positions	16

Insulation resistance

Specification	IEC 60512-3-1:2002-02
Insulation resistance, neighboring positions	> 5 MΩ

Air clearances and creepage distances |

Specification	IEC 60664-1:2007-04
Insulating material group	IIIa
Comparative tracking index (IEC 60112)	CTI 175
Rated insulation voltage (III/3)	32 V
Rated surge voltage (III/3)	2.5 kV
minimum clearance value - non-homogenous field (III/3)	0.8 mm
minimum creepage distance (III/3)	1.3 mm
Rated insulation voltage (III/2)	160 V
Rated surge voltage (III/2)	2.5 kV
minimum clearance value - non-homogenous field (III/2)	1.5 mm
minimum creepage distance (III/2)	1.6 mm
Rated insulation voltage (II/2)	160 V
Rated surge voltage (II/2)	2.5 kV
minimum clearance value - non-homogenous field (II/2)	0.5 mm
minimum creepage distance (II/2)	1.6 mm

Environmental and real-life conditions

Vibration test

Specification	IEC 60068-2-6:2007-12
Frequency	10 - 500 - 10 Hz
Sweep speed	1 octave/min
Amplitude	0.35 mm (10 Hz ... 60.1 Hz)
Acceleration	5g (60.1 Hz ... 500 Hz)
Test duration per axis	2 h
Test directions	X-, Y- and Z-axis (pos. and neg.)

Durability test

Specification	IEC 60512-9-1:2010-03
Impulse withstand voltage at sea level	2.95 kV
Contact resistance R_1	2.5 mΩ
Contact resistance R_2	2.4 mΩ
Insertion/withdrawal cycles	100
Insulation resistance, neighboring positions	> 5 MΩ

Climatic test

Specification	DIN 50018:2013-05
Corrosive stress	1.0 dm^3 SO_2 on 300 dm^3/40 °C/3 cycles
Thermal stress	100 °C/168 h
Power-frequency withstand voltage	1.39 kV

Ambient conditions

Ambient temperature (operation)	-40 °C ... 100 °C (dependent on the derating curve)
Ambient temperature (storage/transport)	-40 °C ... 70 °C
Relative humidity (storage/transport)	30 % ... 70 %
Ambient temperature (assembly)	-5 °C ... 100 °C

Packaging specifications

Dimensional drawing	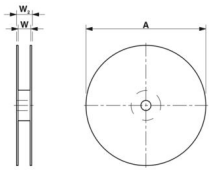
Type of packaging	56 mm wide tape
[W] tape width	56 mm
[W2] coil overall dimension	62.4 mm
[A] coil diameter	330 mm
Outer packaging type	Transparent-Bag
ESD level	(D) electrostatically conductive
Specification	DIN EN 61340-5-1 (VDE 0300-5-1): 2008-07

Drawings

Drilling plan/solder pad geometry

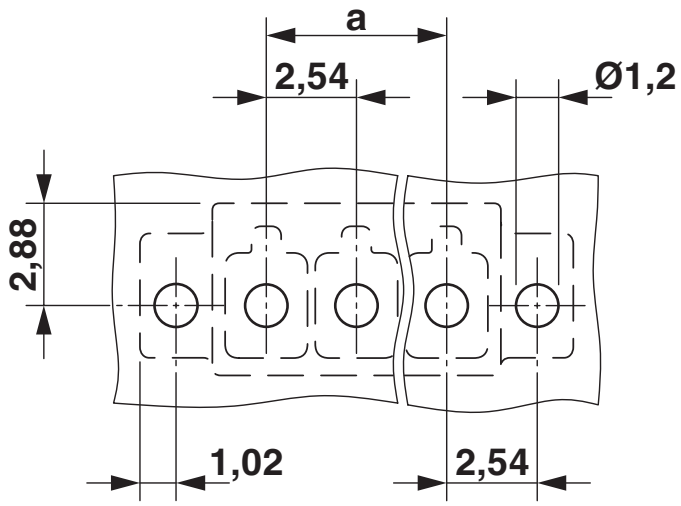

Dimensional drawing

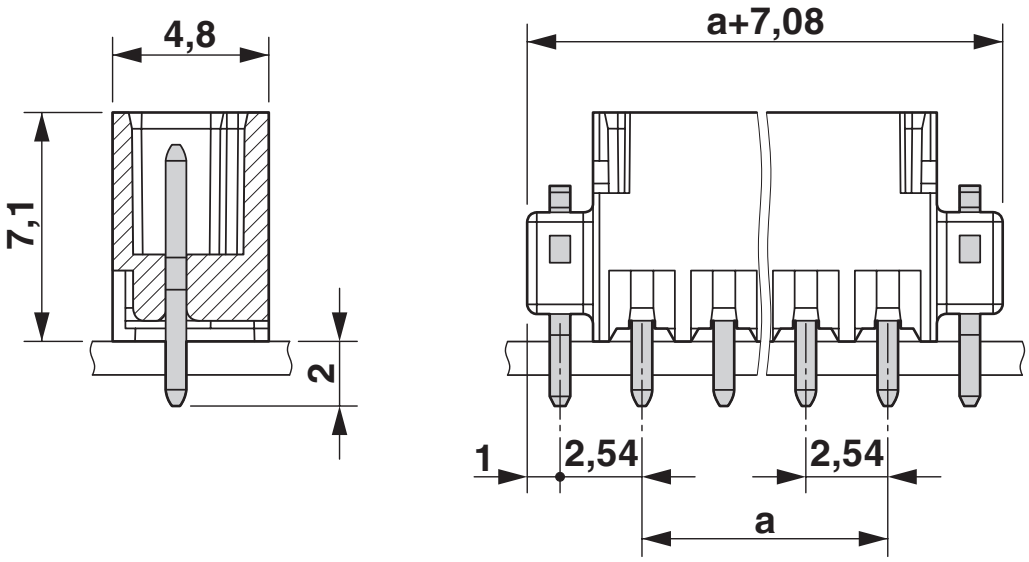

Diagram

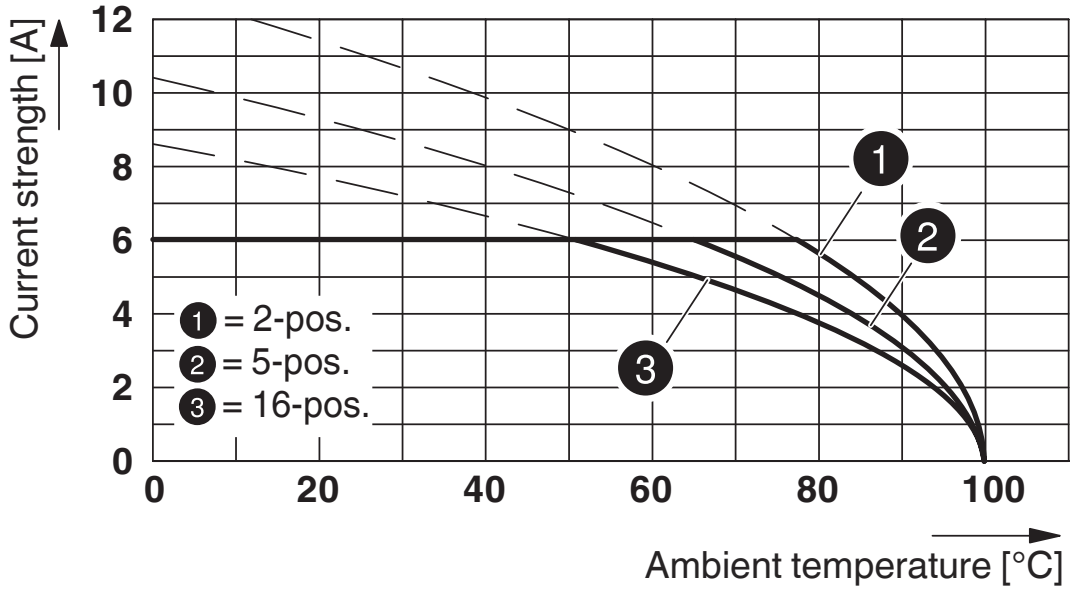

Type: FMC 0,5/...-ST-2,54 with MCV 0,5/...-G-2,54 P20 THR R..

Approvals

To download certificates, visit the product detail page: https://www.phoenixcontact.com/us/products/1821478

cULus Recognized
Approval ID: E60425-19920306

	Nominal voltage U_N	Nominal current I_N	Cross section AWG	Cross section mm^2
Use group B				
Field wiring	150 V	6 A	-	-
Use group C				
Factory wiring	50 V	6 A	-	-

VDE report with production monitoring
Approval ID: 40042258

	Nominal voltage U_N	Nominal current I_N	Cross section AWG	Cross section mm^2
	160 V	6 A	-	-

Classifications

ECLASS

ECLASS-11.0	27460201
ECLASS-12.0	27460201
ECLASS-13.0	27460201

ETIM

ETIM 9.0	EC002637

UNSPSC

UNSPSC 21.0	39121400

Environmental product compliance

EU RoHS

Fulfills EU RoHS substance requirements	Yes, No exemptions

China RoHS

Environment friendly use period (EFUP)	EFUP-E
	No hazardous substances above the limits

EU REACH SVHC

REACH candidate substance (CAS No.)	No substance above 0.1 wt%

Phoenix Contact 2025 © - all rights reserved
https://www.phoenixcontact.com

Phoenix Contact USA
586 Fulling Mill Road
Middletown, PA 17057, United States
(+717) 944-1300
info@phoenixcon.com