DFN0603-2L Plastic-Encapsulate ESD Protection Diodes

Features

- Low leakage current
- Low clamping voltage
- IEC 61000-4-2 (ESD Air): ±30kV
- IEC 61000-4-2 (ESD Contact): ±30kV
- IEC 61000-4-5 (Lightning 8/20μs): 10A

Reverse Working Voltage
5V Max.
Ultra Small Capacitance
0.2pF(Typ.)

Applications

- Cellular Handsets and Accessories
- Personal Digital Assistants
- Notebooks and Handhelds
- Portable Instrumentation,Digital Cameras
- Peripherals, Audio Players
- Industrial Equipment

DFN0603-2L

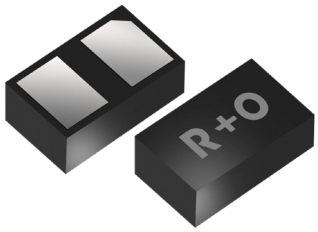

Function Diagram

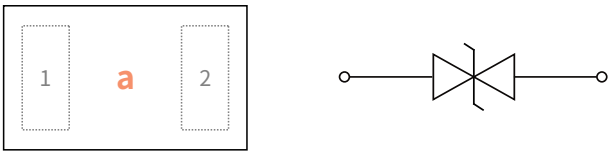

Maximum Ratings (Ta=25°C Unless otherwise specified)

SYMBOL	PARAMETER	CONDITIONS	VALUE	UNIT
V_{ESD}	Electrostatic Discharge Voltage	ESD per IEC 61000-4-2(Air)	±30	KV
		ESD per IEC 61000-4-2(Contact)	±30	KV
P_{PP}	Peak Pulse Power	tp = 8/20 μs	60	W
I_{PP}	Rated Peak Pulse Current	tp = 8/20 μs	10	A
T_J	Operating JunctionTemperature Range	—	-40 to +125	°C
T_{STG}	Storage Temperature Range	—	-55 to +150	°C

Electrical Parameter

SYMBOL	PARAMETER
V_C	Clamping Voltage @ I_{PP}
V_{BR}	Breakdown Voltage @ I_T
I_{PP}	Peak Pulse Current
I_T	Test Current
I_R	Reverse Leakage Current @ VRWM
V_{RWM}	Peak Reverse Working Voltage
P_{PP}	Peak Pulse Power Dissipation
C_J	Junction Capacitance @ V_R=0V,f=1MHz
I_F	Forward Current
V_F	Forward Voltage @I_F

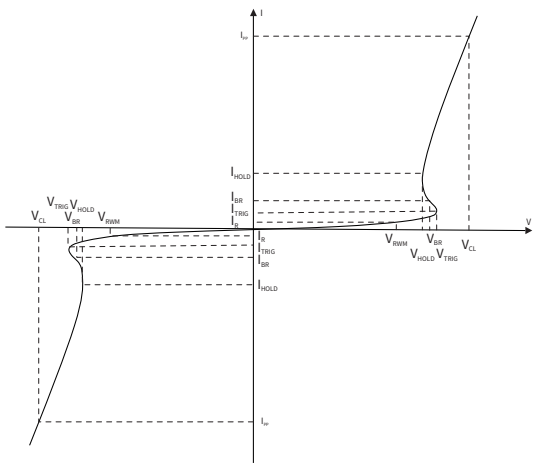

Electrical Characteristics (Ta=25°C Unless otherwise specified)

PARAMETER	SYMBOL	CONDITION	Min	Typ	Max	UNIT
Peak Reverse Working Voltage	V_{RWM}	T_a=25°C	—	—	5.0	V
Breakdown Voltage	V_{BR}	I_R=1.0mA,T_a=25°C	5.5	10	—	V
Reverse Leakage Current	I_R	V_R=5.0V,T_a=25°C	—	—	0.1	μA
Holding Voltage	V_H	I_H=100mA	1.2	—	—	V
Clamping Voltage	V_C	I_{PP}=10A, t_p=8/20μs	—	6.0	—	V
		I_{TLP}=16A,t_p=10/100ns	—	6.0	—	
Dynamic Resistance	R_{DYN}	t_p=10/100ns	—	0.23	—	Ω
Junction Capacitance	C_J	V_{RMW}=0V,f=1MHz	—	0.20	—	pF

Ratings And Characteristics Curves (Ta=25°C Unless otherwise specified)

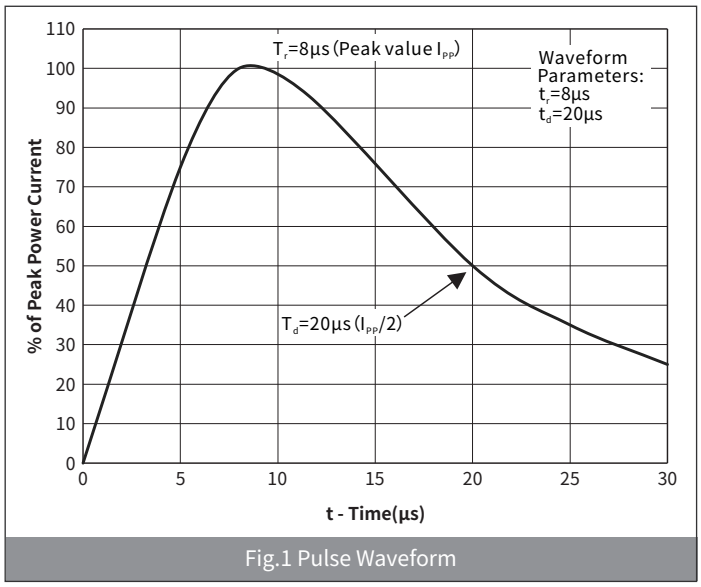

Fig.1 Pulse Waveform

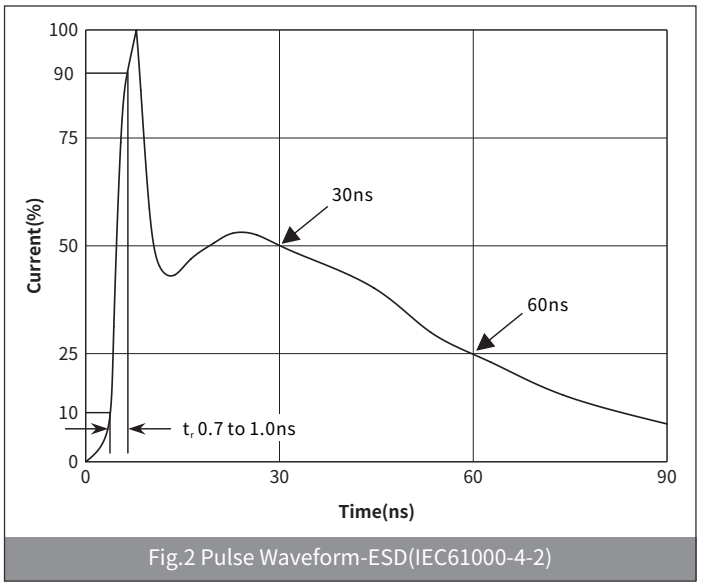

Fig.2 Pulse Waveform-ESD(IEC61000-4-2)

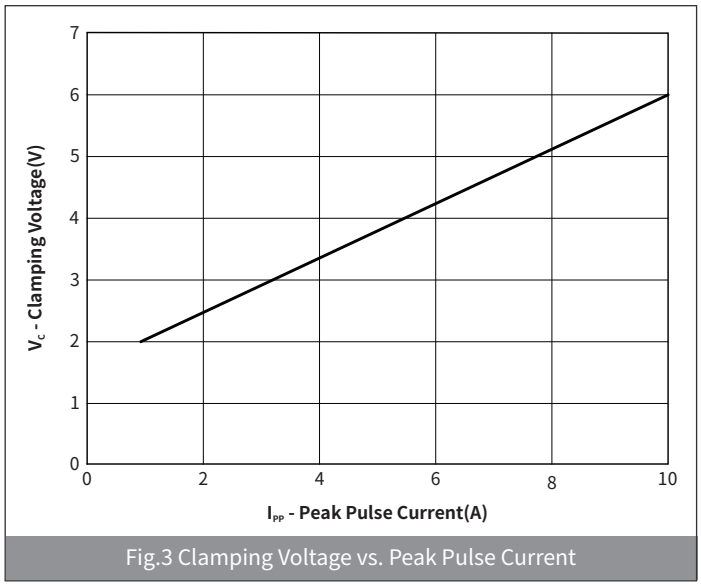

Fig.3 Clamping Voltage vs. Peak Pulse Current

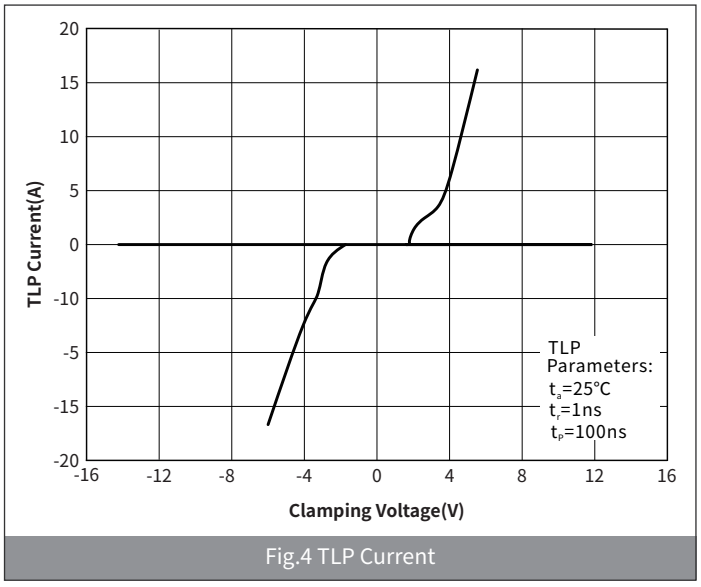

Fig.4 TLP Current

Ordering Information

PREFERED P/N	PACKAGE	SIZE(mm)	DELIVERY MODE	MPQ(PCS)
H5VU06BS	DFN0603-2L	0.6×0.30×0.30	7''REEL	10,000

Recommended Soldering Conditions

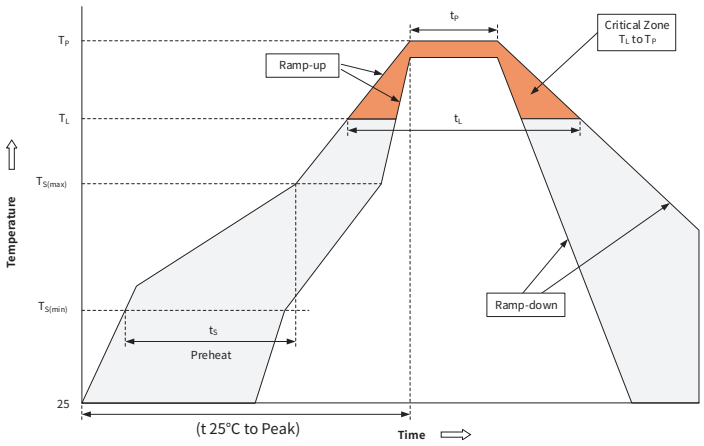

Profile Feature		Pb-Free Assembly
Pre-heat	Temperature Min ($T_{S(min)}$)	+150°C
	Temperature Max($T_{S(max)}$)	+200°C
	Time (Min to Max) (t_s)	60-180 secs.
Average ramp up rate (Liquid us Temp (T_L) to peak)		3°C /sec. Max
$T_{S(max)}$ to T_L - Ramp-up Rate		3°C /sec. Max
Reflow	Temperature(T_L)(Liquid us)	+217°C
	Temperature(t_L)	60-150 secs.
Peak Temp (T_P)		+260(+0/-5)°C
Time within 5°C of actual Peak Temp (t_P)		20-40secs
Ramp-down Rate		6°C /sec. Max
Time 25°C to Peak Temp (T_P)		8 min. Max
Do not exceed		+260°C

Package Outline Dimensions (DFN0603-2L)

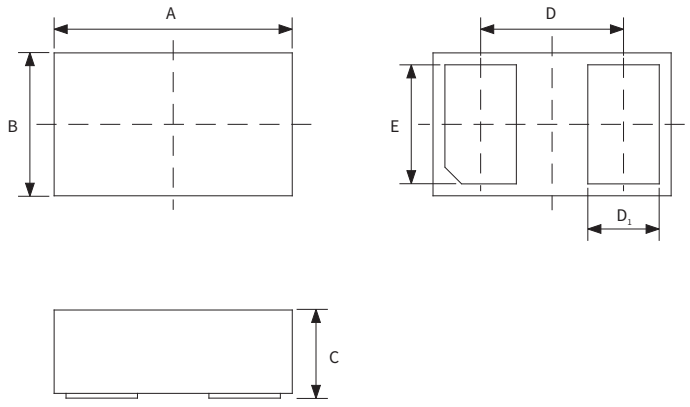

Symbol	Dimensions			
	Millimeters		Inches	
	Min.	Max.	Min.	Max.
A	0.55	0.65	0.022	0.026
B	0.25	0.35	0.010	0.014
C	0.23	0.34	0.009	0.013
D	0.35	0.45	0.014	0.018
D_1	0.16	0.22	0.006	0.009
E	0.20	0.30	0.008	0.012

Suggested Pad Layout

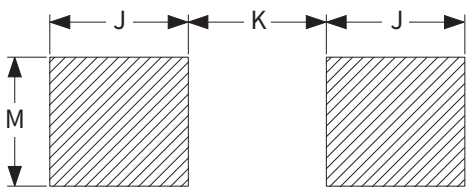

Symbol	Dimensions			
	Millimeters		Inches	
	Min.	Max.	Min.	Max.
J	0.20	0.24	0.008	0.009
K	0.18	0.22	0.007	0.009
M	0.30	0.34	0.012	0.013