WWW.XYECONN.COM

REV.	Q'TY	ECN. NO.	APR.	DATE

说明:

1.产品表面清洁,无锈蚀、氧化、裂纹、缺芯、毛刺、及其它机械损伤;
2.塑胶材料:LCP UL94V-0,颜色:本色;
3.焊片:黄铜,镀底30u"Min.,镀锡50u"Min.;
4.接触针:黄铜,镀底30u"Min.,镀锡50u"Min.;
5.满足灼热丝温度850度.
6.工作温度-40~+85°C
7.额定电流:3A AC/DC
8.额定电压:250V AC/DC
9.接触阻抗:10mΩ Max.
10.绝缘阻抗:1000MΩ Min.
11.耐电压:1000V AC FOR 1 MINUTE

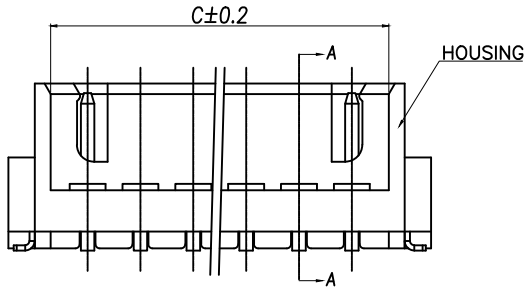

P/N	PIN	DIM A	DIM B	DIM C
XY-XH2.54-2PLT	2	2.50	9.90	5.90
XY-XH2.54-3PLT	3	5.00	12.40	8.40
XY-XH2.54-4PLT	4	7.50	14.90	10.90
XY-XH2.54-5PLT	5	10.00	17.40	13.40
XY-XH2.54-6PLT	6	12.50	19.90	15.90
XY-XH2.54-7PLT	7	15.00	22.40	18.40
XY-XH2.54-8PLT	8	17.50	24.90	20.90
XY-XH2.54-9PLT	9	20.00	27.40	23.40
XY-XH2.54-10PLT	10	22.50	29.90	25.90
XY-XH2.54-11PLT	11	25.00	32.40	28.40
XY-XH2.54-12PLT	12	27.50	34.90	30.90
XY-XH2.54-13PLT	13	30.00	37.40	33.40
XY-XH2.54-14PLT	14	32.50	39.90	35.90
XY-XH2.54-15PLT	15	35.00	42.40	38.40
XY-XH2.54-16PLT	16	37.50	44.90	40.90
XY-XH2.54-17PLT	17	40.00	47.40	43.40
XY-XH2.54-18PLT	18	42.50	49.90	45.90
XY-XH2.54-19PLT	19	45.00	52.40	48.40
XY-XH2.54-20PLT	20	47.50	54.90	50.90

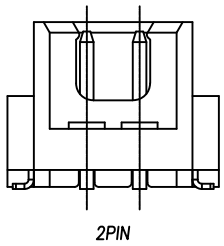

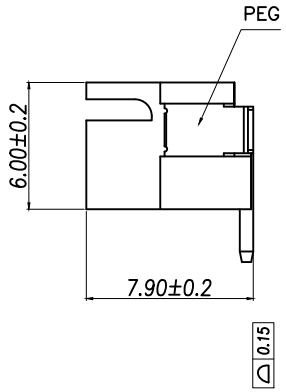

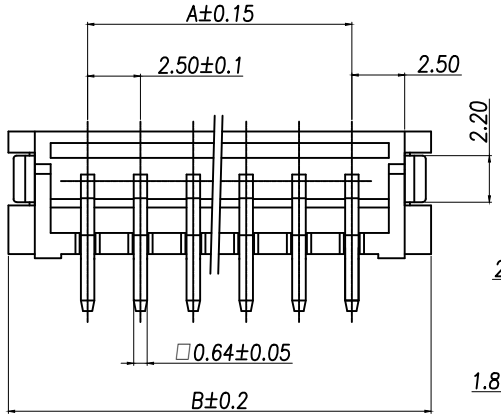

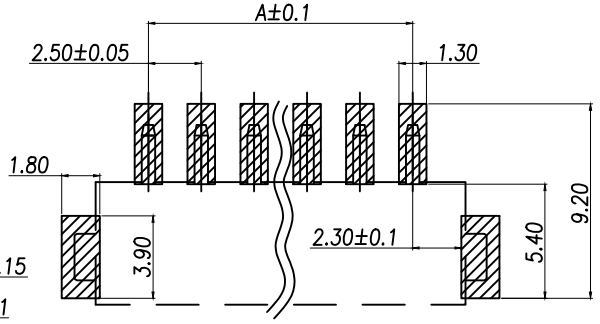

PCB LAYOUT
TOL.: ±0.05

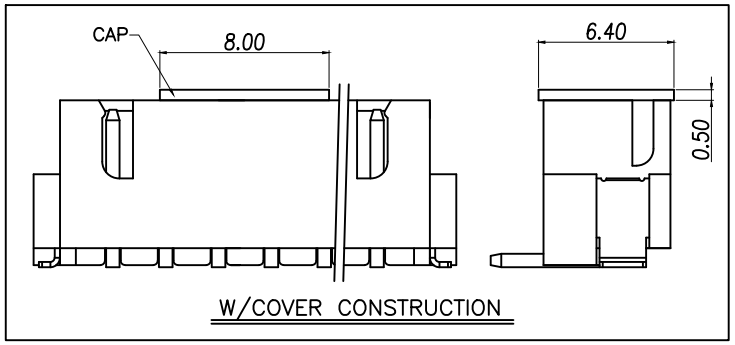

W/COVER CONSTRUCTION

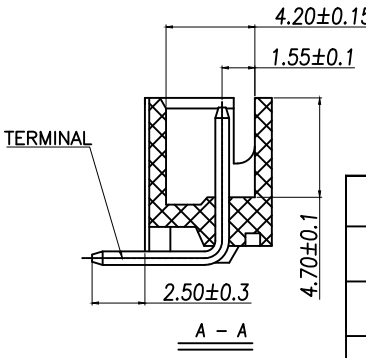

A - A

DIMENSION IN mm		厦门市辛译精密电子有限公司 Xiamen XinYi Xyeconn Electronics Co.,Ltd			
TOLERANCE UNLESS OTHERWISE SPECIFIED					
.X± 0.50	X.°± 5°	APR. Alex	TITLE: TJC3-SMT-A针座		
.XX± 0.20	.X°± 3°	CHK. Jack	DWG NO. XY-XH2.54-NPLT		
.XXX± 0.10	.XX°± 1°	DRA. Can	PROJ.	CUSTOMER DRAWING	
			SIZE A4	SCALE 1:1	SHEET 1/1 REV. A

F-RD-18A