±15kV ESD-Protected, 1μA, 3.0V to 5.5V, 250kbps,RS-232 Transceivers with AutoShutdown

1 FEATURES

- True RS-232 Operation from Vcc = +3.0V to +5.5V
- 1μA Supply Current Achieved with AutoShutdown
- Guaranteed 250kbps Data Rate
- Automatic power-down feature automatically disables drivers for power savings
- Software control option for shutdown
- Meets or exceeds the requirements of TIA/EIA-232-F and ITU V.28 standards
- Enhanced ESD specifications:
  ±15kV Human Body Model
  ±15kV IEC61000-4-2 Air Discharge
  ±8kV IEC61000-4-2 Contact Discharge

2 APPLICATIONS

- Notebook, Subnotebook, and Palmtop Computers
- Cellular Phones
- Battery-Powered Equipment
- Handheld Equipment
- Peripherals
- Printers

3 DESCRIPTION

The GM3221E is 3V/5.5V powered communications interfaces with automatic shutdown/wake up features, high data rate capabilities, and enhanced electrostatic discharge (ESD) protection .Transmitter output and receiver input are protected to ±15kV using IEC 1000-4-2 Air Gap Discharge, to ±8kV using IEC 1000-4-2 Contact Discharge, and to ±15kV using the Human Body Model.The GM3221E device consists of one line driver,one line receiver with dedicated enable pin.It saves power without changes to the existing BIOS or operating system by entering low-power shutdown mode when the RS-232 cable is disconnected, or when the transmitters of the connected peripherals are off.The transceivers have a proprietary low-dropout transmitter output stage, delivering true RS-232 performance from a +3.0V to +5.5V supply with a dual charge pump.The charge pump requires only four small 0.1μF capacitors for operation from a +3.3V supply. Each device is guaranteed to run at data rates of 250kbps while maintaining RS-232 output levels.

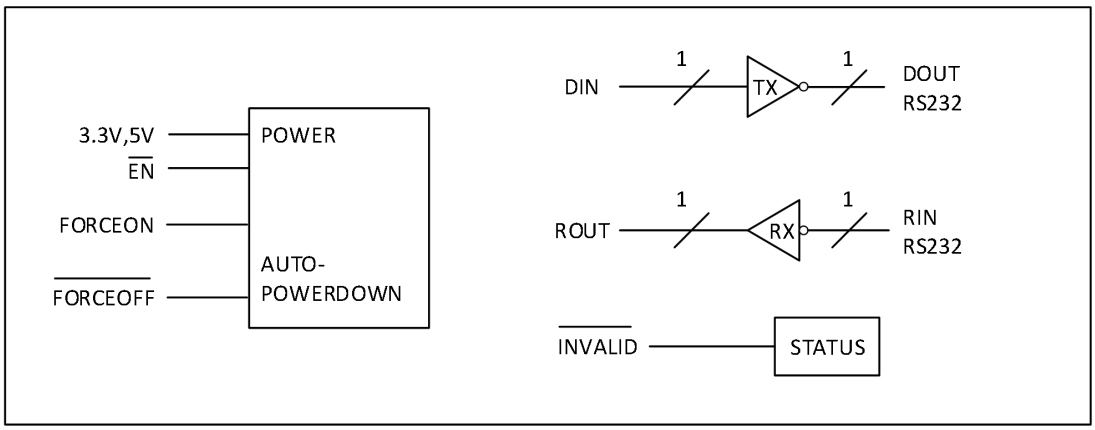

Simplified Circuit Diagram

Copyright © GATEMODE Corp.

4 Pin Configuration and Functions

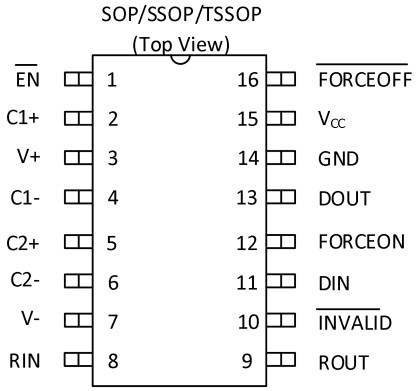

Pin		Type	Description
Name	No.		
C1+	2	-	Positive terminal of the voltage-doubler charge-pump capacitor
C2+	5	-	Positive terminal of the voltage-doubler charge-pump capacitor
C1-	4	-	Negative terminal of the voltage-doubler charge-pump capacitor
C2-	6	-	Negative terminal of the voltage-doubler charge-pump capacitor
DIN	11	I	TTL/CMOS driver input
DOUT	13	O	RS-232 driver output
$\overline{EN}$	1	I	Low input enables receiver ROUT output. High input sets ROUT to high impedance.
$\overline{FORCEOFF}$	16	I	Auto Powerdown Control input (Refer to Truth Table)
FORCEON	12	I	Auto Powerdown Control input (Refer to Truth Table)
GND	14	-	Ground
$\overline{INVALID}$	10	O	Invalid output pin. Output low when all RIN inputs are unpowered.
RIN	8	I	RS-232 receiver input
ROUT	9	O	TTL/CMOS Receiver Output
Vcc	15	-	3V to 5.5V supply voltage
V+	3	O	5.5V supply generated by the charge pump
V-	7	O	-5.5V supply generated by the charge pump

Copyright © GATEMODE Corp.

5 Specifications

5.1 Absolute Maximum Ratings(1)

over operating free-air temperature range (unless otherwise noted)(1)

Parameter	Description		MIN	MAX	UNIT
Vcc	Supply Voltage range(2)		-0.3	6	V
V+	Positive output supply voltage range(2)		-0.3	7	V
V-	Negative output supply voltage range(2)		0.3	-7	V
V+ - V-	Output supply voltage difference(2)			13	V
V_I	Input voltage range	Driver ($\overline{\text{FORCEOFF}}$, FORCEON)	-0.3	6	V
		Receiver	-25	25	
V_O	Output voltage range	Driver	-13.2	13.2	V
		Receiver ($\overline{\text{INVALID}}$)	-0.3	Vcc+0.3	
T_J	Junction Temperature			150	°C
T_{stg}	Storage temperature range		-65	150	°C

(1) Stresses beyond those listed under Absolute Maximum Ratings may cause permanent damage to the device. These are stress ratings only, and functional operation of the device at these or any other conditions beyond those indicated under Recommended Operating Conditions is not implied. Exposure to absolute-maximum-rated conditions for extended periods may affect device reliability.
(2) All voltages are with respect to network GND.

5.2 ESD Ratings

Parameter				Limit	Unit
$V_{(ESD)}$	Electrostatic discharge	HBM (Human Body Model),per ANSI/ESDA/JEDEC JS-001(1)	DOUT,RIN	±3000	V
			Other Pins	±15000	
		Charged-device model (CDM), per JEDEC specification JESD22-C101(2)		±1500	

5.3 Recommended Operating Conditions

See Figure 7(1)

Parameter	Description			MIN	NOM	MAX	UNIT
Vcc	Supply Voltage range		Vcc=3.3V	3	3.3	3.6	V
			Vcc=5V	4.5	5	5.5	
V_{IH}	Driver and control high-level input voltage	DIN, $\overline{\text{FORCEOFF}}$ FORCEON	Vcc=3.3V	2			V
			Vcc=5V	2.4		5.5	
V_{IL}	Driver and control low-level input voltage	DIN,FORCEON, $\overline{\text{EN}}$, $\overline{\text{FORCEOFF}}$				0.8	V
V_I	Driver and control input voltage	DIN,FORCEON, $\overline{\text{EN}}$, $\overline{\text{FORCEOFF}}$		0		5.5	V
V_I	Receiver input voltage			-25		25	V
T_A	Operating free-air temperature			-40		125	°C

(1) Test conditions are C1–C4 = 0.1μF at Vcc = 3.3 V ± 0.3 V; C1 = 0.047μF, C2–C4 = 0.33μF at Vcc = 5 V ± 0.5 V.

Copyright © GATEMODE Corp.

5.4 Thermal Information

Parameter	THERMAL METRIC	SSOP	TSSOP	UNIT
		16 PINS	16 PINS	
$R_{\theta JA}$	Junction-to-ambient thermal resistance	105.8	110.9	°C/W
$R_{\theta JC(top)}$	Junction-to-case (top) thermal resistance	51.9	41.7	°C/W
$R_{\theta JB}$	Junction-to-board thermal resistance	57.6	57.2	°C/W
ψ_{JT}	Junction-to-top characterization parameter	14.1	4.2	°C/W
ψ_{JB}	Junction-to-board characterization parameter	56.8	56.6	°C/W

5.5 Electrical Characteristics

over recommended ranges of supply voltage and operating free-air temperature (unless otherwise noted)(1)
(see Figure 7)

Parameter			TEST CONDITIONS	MIN	TYP(2)	MAX	UNIT
I_I	Input leakage current	FORCEON, $\overline{EN}$, $\overline{FORCEOFF}$			±0.01	±1	μA
I_{CC}	Supply current (T_A = 25°C)	Auto-powerdown disabled	No load, $\overline{FORCEOFF}$ and FORCEON at Vcc		0.3	1	mA
		Powered off	No load, $\overline{FORCEOFF}$ at GND		1	10	μA
		Auto-powerdown enabled	No load, $\overline{FORCEOFF}$ at Vcc, FORCEON at GND,All R_{IN} are open or grounded,All D_{IN} are grounded		1	10	μA

(1) Test conditions are C1–C4 = 0.1μF at Vcc = 3.3 V ± 0.3 V; C1 = 0.047μF, C2–C4 = 0.33μF at Vcc = 5 V ± 0.5 V.
(2) All typical values are at Vcc = 3.3 V or Vcc = 5 V, and T_A = 25°C.

5.6 Driver Electrical Characteristics

over recommended ranges of supply voltage and operating free-air temperature (unless otherwise noted)(1)
(see Figure 7)

Parameter		TEST CONDITIONS	MIN	TYP(2)	MAX	UNIT
V_{OH}	High-level output voltage	All D_{OUT} at RL = 3kΩ to GND,D_{IN}=GND	5	5.4		V
V_{OL}	Low-level output voltage	All D_{OUT} at RL = 3kΩ to GND,D_{IN}=V_{CC}		-5.4	-5	V
I_{IH}	High-level input current	V_I= Vcc		±0.01	±1	μA
I_{IL}	Low-level input current	V_I at GND		±0.01	±1	μA
I_{OS}	Short-circuit output current(3)	Vcc = 3.6V, V_O = 0V		±30	±60	mA
		Vcc = 5.5V, V_O = 0V		±30	±60	
r_o	Output resistance	Vcc, V+, and V– = 0V, V_O = ±2V	300	10M		Ω
I_{off}	Output leakage current	$\overline{FORCEOFF}$ = GND, V_O = ±12V, Vcc = 3V to 3.6V			±25	μA
		$\overline{FORCEOFF}$ = GND, V_O = ±12V, Vcc = 4.5V to 5.5V			±25	

(1) Test conditions are C1–C4 = 0.1μF at Vcc = 3.3V ± 0.3V; C1 = 0.047μF, C2–C4 = 0.33μF at Vcc = 5 V ± 0.5V.
(2) All typical values are at Vcc = 3.3V or Vcc = 5V, and T_A = 25°C.
(3) Short-circuit durations should be controlled to prevent exceeding the device absolute power dissipation ratings, and not more than one output should be shorted at a time.

Copyright © GATEMODE Corp.
Tel: (+86) 13135660803
Email: sales@gmmicro.com

5.7 Receiver Electrical Characteristics

over recommended ranges of supply voltage and operating free-air temperature (unless otherwise noted)(1)
(see Figure 7)

Parameter		TEST CONDITIONS	MIN	TYP(2)	MAX	UNIT
V_{OH}	High-level output voltage	I_{OH} = –1mA	Vcc – 0.6	Vcc – 0.1		V
V_{OL}	Low-level output voltage	I_{OH} = 1.6mA		0.1	0.4	V
V_{IT+}	Positive-going input threshold voltage	Vcc = 3.3 V		1.4	2.4	V
		Vcc = 5 V		1.7	2.4	
$V_{IT–}$	Negative-going input threshold voltage	Vcc = 3.3 V	0.6	1.1		V
		Vcc = 5 V	0.8	1.3		
V_{hys}	Input hysteresis (V_{IT+} –$V_{IT–}$)			0.4		V
I_{off}	Output leakage current (except ROUT2B)	$\overline{FORCEOFF}$ =0V		±0.03	±10	μA
ri	Input resistance	V_I= ±3 V or ±25V	3	6	8	KΩ

(1) Test conditions are C1–C4 = 0.1μF at Vcc = 3.3V ± 0.3 V; C1 = 0.047μF, C2–C4 = 0.33μF at Vcc = 5V ± 0.5V.
(2) All typical values are at Vcc = 3.3V or Vcc = 5V, and T_A = 25°C.

5.8 Auto-Powerdown Electrical Characteristics

over recommended ranges of supply voltage and operating free-air temperature (unless otherwise noted)(1)
(see Figure 7)

Parameter		TEST CONDITIONS	MIN	TYP(1)	MAX	UNIT
$V_{IT+(valid)}$	Receiver input threshold for $\overline{INVALID}$ high-level output voltage	FORCEON = GND, $\overline{FORCEOFF}$ =V_{CC}			2.7	V
$V_{IT–(valid)}$	Receiver input threshold for $\overline{INVALID}$ high-level output voltage	FORCEON = GND, $\overline{FORCEOFF}$ =V_{CC}	-2.7			V
$V_{T(invalid)}$	Receiver input threshold for $\overline{INVALID}$ low-level output voltage	FORCEON = GND, $\overline{FORCEOFF}$ =V_{CC}	-0.3		0.3	V
V_{OH}	$\overline{INVALID}$ high-level output voltage	I_{OH} = -1mA, FORCEON = GND, $\overline{FORCEOFF}$ =V_{CC}	Vcc-0.6			V
V_{OL}	$\overline{INVALID}$ low-level output voltage	I_{OL} = 1.6mA, FORCEON = GND, $\overline{FORCEOFF}$ =V_{CC}			0.4	V

5.9 Driver Switching Characteristics

over recommended ranges of supply voltage and operating free-air temperature (unless otherwise noted)(1)
(see Figure 7)

Parameter		TEST CONDITIONS		MIN	TYP(2)	MAX	UNIT
	Maximum data rate	C_L = 1000pF,One D_{OUT} switching, R_L = 3kΩ.See Figure 1		125	250		kbit/s
$t_{sk(p)}$	Pulse skew(3)	C_L = 150pF to 2500pF, R_L = 3kΩ to 7kΩ,See Figure 2			100		ns
$SR_{(tr)}$	Slew rate, transition region (see Figure 1)	Vcc = 3.3 V,R_L = 3kΩ to 7kΩ	C_L = 150pF to 1000pF	6		30	V/μs
			C_L = 150pF to 2500pF	4		30	

(1) Test conditions are C1–C4 = 0.1μF at Vcc = 3.3 V + 0.3 V; C1 = 0.047μF, C2–C4 = 0.33μF at Vcc = 5 V ± 0.5 V.
(2) All typical values are at Vcc = 3.3 V or Vcc = 5 V, and T_A = 25°C.
(3) Pulse skew is defined as $|t_{PLH} – t_{PHL}|$ of each channel of the same device.

Copyright © GATEMODE Corp.
Tel: (+86) 13135660803
Email: sales@gmmicro.com

5.10 Receiver Switching Characteristics

over recommended ranges of supply voltage and operating free-air temperature (unless otherwise noted)(1)
(see Figure 7)

Parameter		TEST CONDITIONS	MIN	TYP(2)	MIN	UNIT
t_{PLH}	Propagation delay time, low to high level output	C_L = 150pF, See Figure 3		30		ns
t_{PHL}	Propagation delay time, high to low level output	C_L = 150pF, See Figure 3		30		ns
t_{en}	Output enable time	C_L = 150pF, R_L = 3kΩ,See Figure 4		200		ns
t_{dis}	Output disable time	C_L = 150pF, R_L = 3kΩ,See Figure 4		200		ns
$t_{sk(p)}$	Puse skew(3)	$t_{sk(p)}$ Puse skew(3) See Figure 3		10		ns

(1) Test conditions are C1–C4 = 0.1μF at Vcc = 3.3V ± 0.3V; C1 = 0.047μF, C2–C4 = 0.33μF at Vcc = 5V ± 0.5V.
(2) All typical values are at Vcc = 3.3V or Vcc = 5V, and T_A = 25°C.
(3) Pulse skew is defined as $|t_{PLH} - t_{PHL}|$ of each channel of the same device.

5.11 Auto-Powerdown Switching Characteristics

over recommended ranges of supply voltage and operating free-air temperature (unless otherwise noted)(1)

Parameter		MIN	TYP(1)	MAX	UNIT
t_{valid}	Propagation delay time, low- to high-level output		1		μs
$t_{invalid}$	Propagation delay time, high- to low-level output		30		μs
t_{en}	Supply enable time		100		μs

(1) All typical values are at Vcc = 3.3 V or Vcc = 5 V, and T_A = 25°C.

6 Parameter Measurement Information

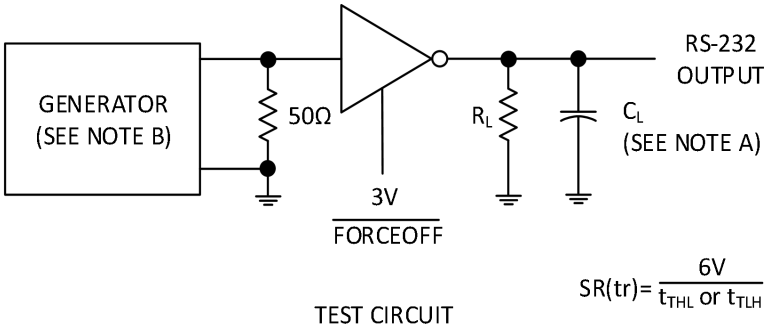

TEST CIRCUIT

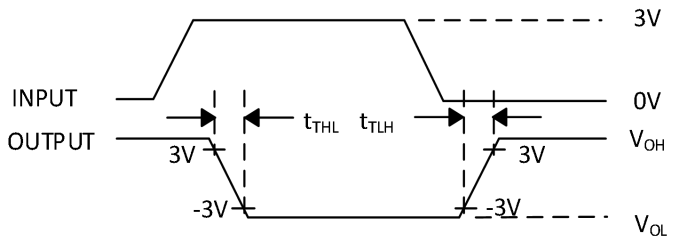

VOLTAGE
WAVEFORMS

A. CL includes probe and jig capacitance
B. The pulse generator has the following characteristics: PRR = 250kbit/s, Z_O = 50 Ω, 50 % duty cycle, tr ≤ 10ns, tf ≤ 10ns.

Figure 1. Driver Slew Rate

Copyright © GATEMODE Corp.

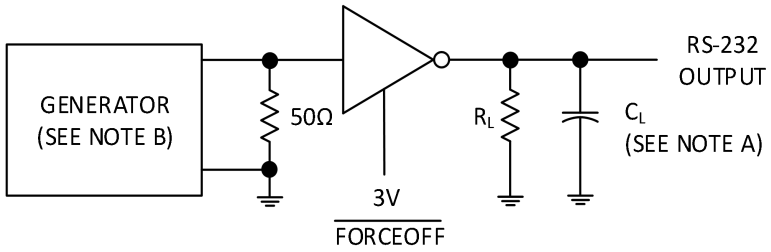

TEST CIRCUIT

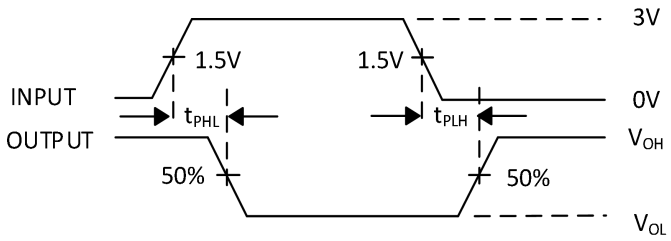

VOLTAGE
WAVEFORMS

A. CL includes probe and jig capacitance
B. The pulse generator has the following characteristics: PRR = 250kbit/s, Z_O = 50 Ω, 50 % duty cycle, tr ≤ 10ns, tf ≤ 10ns.

Figure 2. Driver Pulse Skew

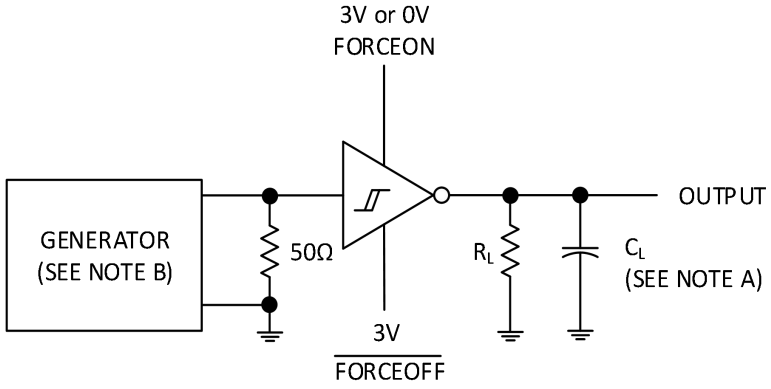

TEST CIRCUIT

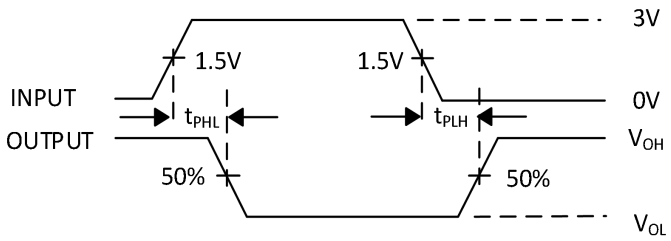

VOLTAGE
WAVEFORMS

A. CL includes probe and jig capacitance
B. The pulse generator has the following characteristics: PRR = 250kbit/s, ZO = 50 Ω, 50 % duty cycle, tr ≤ 10ns, tf ≤ 10ns.

Figure 3. Receiver Propagation Delay Times

Copyright © GATEMODE Corp.

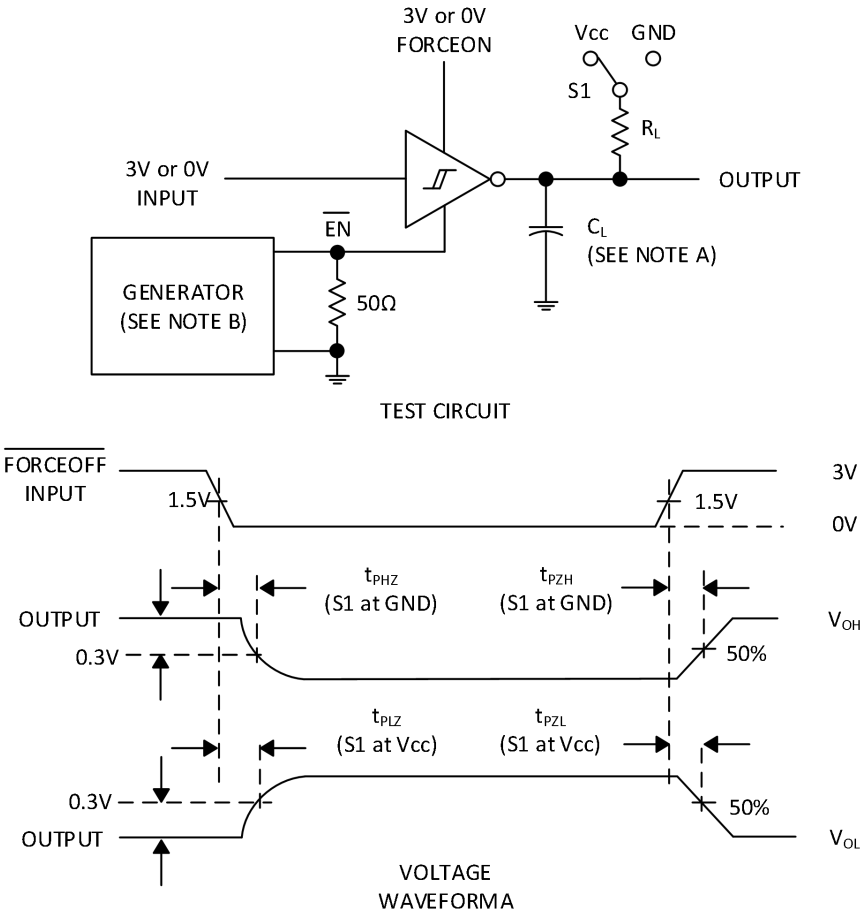

A. CL includes probe and jig capacitance
B. The pulse generator has the following characteristics: Z_O = 50 Ω, 50 % duty cycle, t_r ≤ 10ns, t_f ≤ 10ns.
C. t_{PLZ} and t_{PHZ} are the same as t_{dis}.
D. t_{PZL} and t_{PZH} are the same as t_{en}.

Figure 4. Receiver Enable and Disable Times

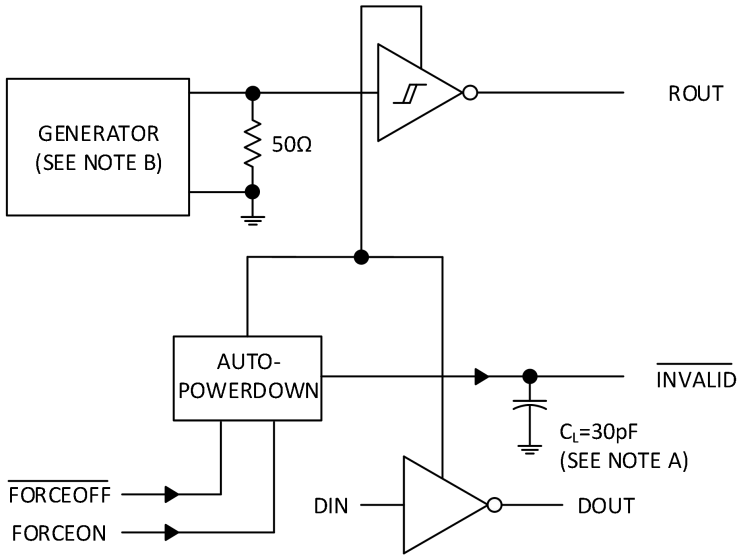

Copyright © GATEMODE Corp.

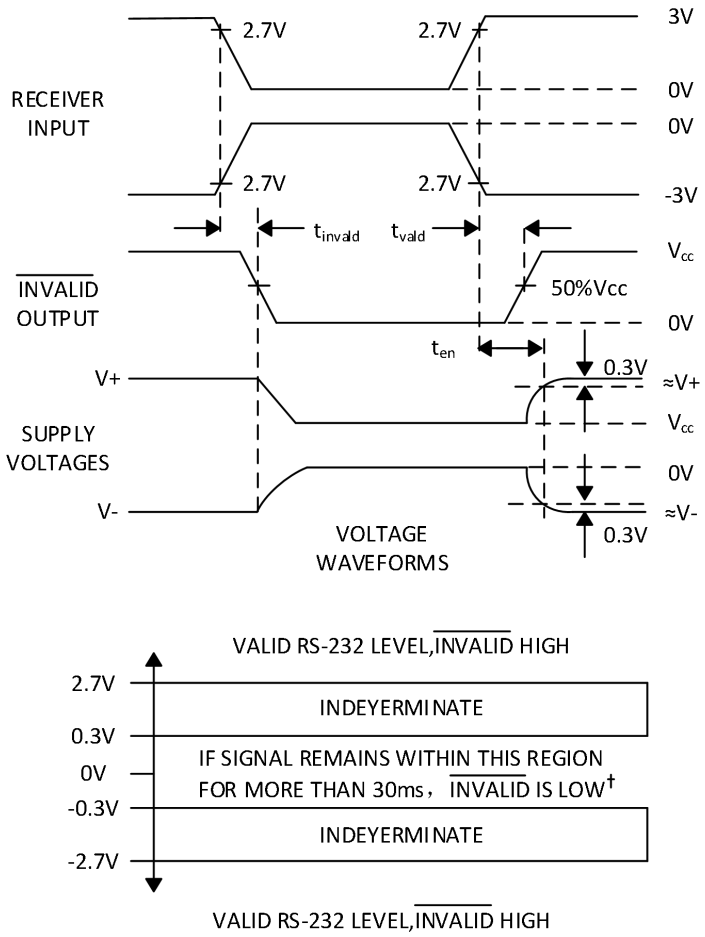

A. CL includes probe and jig capacitance.
B. The pulse generator has the following characteristics: PRR = 5kbit/s, ZO = 50 Ω, 50 % duty cycle, tr ≤ 10ns, tf ≤ 10ns.

Figure 5. $\overline{\text{INVALID}}$ Propagation Delay Times and Driver Enabling Time

7 Detailed Description

7.1 Overview

The GM3221E device is a one-driver and one-receiver RS-232 interface device. All RS-232 inputs and outputs are protected to ±15kV using the Human Body Model. The charge pump requires only four small 0.1µF capacitors for operation from a 3.3V supply. The GM3221E is capable of running at data rates up to 250kbps, while maintaining RS-232-compliant output levels.

Automatic power-down can be disabled when FORCEON and $\overline{\text{FORCEOFF}}$ are high. With automatic power down plus enabled, the device activates automatically when a valid signal is applied to any receiver input. The device can automatically power down the driver to save power when the RIN input is unpowered.

$\overline{\text{INVALID}}$ is high (valid data) if receiver input voltage is greater than 2.7V or less than –2.7V, or has been between –0.3 V and 0.3 V for less than 30µs. $\overline{\text{INVALID}}$ is low (invalid data) if receiver input voltages are between –0.3 V and 0.3 V for more than 30µs.

Copyright © GATEMODE Corp.

7.2 Functional Block Diagram

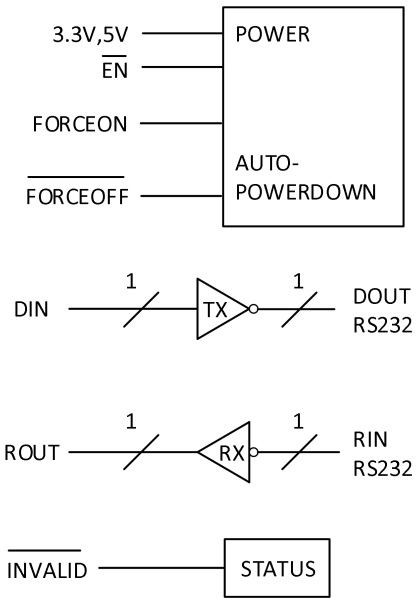

7.3 Feature Description

7.3.1 Power

The power block increases, inverts, and regulates voltage at V+ and V- pins using a charge pump that requires four external capacitors. Auto-power-down feature for driver is controlled by FORCEON and $\overline{\text{FORCEOFF}}$ inputs. Receiver is controlled by $\overline{\text{EN}}$ input. See Table 1 and Table 2
When GM3221E is unpowered, it can be safely connected to an active remote RS232 device.

7.3.2 RS232 Driver

One driver interfaces standard logic level to RS232 levels. DIN input must be valid high or low.

7.3.3 RS232 Receiver

One receiver interfaces RS232 levels to standard logic levels. An open input will result in a high output on ROUT. RIN input includes an internal standard RS232 load. A logic high input on the $\overline{\text{EN}}$ pin will shutdown the receiver output.

7.3.3 RS232 Status

The $\overline{\text{INVALID}}$ output goes low when RIN input is unpowered for more than 30μs. The $\overline{\text{INVALID}}$ output goes high when receiver has a valid input. The $\overline{\text{INVALID}}$ output is active when Vcc is powered irregardless of FORCEON and $\overline{\text{FORCEOFF}}$ inputs (see Table 3).

Copyright © GATEMODE Corp.

7.4 Device Functional Modes

Table 1 through 3 show the device functional modes.

Table 1.Each Driver

INPUTS(1)				OUTPUT	DRIVER STATUS
DIN	FORCEON	$\overline{\text{FORCEOFF}}$	VALID RIN RS-232 LEVEL	DOUT	
X	X	L	X	Z	Powered off
L	H	H	X	H	Normal operation with auto-powerdown disabled
H	H	H	X	L	
L	L	H	Y	H	Normal operation with auto-powerdown enabled
H	L	H	Y	L	
L	L	H	N	Z	Powered off by auto-powerdown feature
H	L	H	N	Z	

Table 2.Each Receiver

INPUTS(1)			OUTPUT	RECEIVER STATUS
RIN	$\overline{\text{EN}}$	VALID RIN RS-232 LEVEL	ROUT	
X	H	X	Z	Powered off
L	L	X	H	Normal operation
H	L	X	L	
OPEN	L	No	H	

Table 3. $\overline{\text{INVALID}}$

INPUTS(1)				OUTPUTS
RIN	FORCEON	$\overline{\text{FORCEOFF}}$	$\overline{\text{EN}}$	$\overline{\text{INVALID}}$
L	X	X	X	H
H	X	X	X	H
OPEN	X	X	X	L

(1) H = high level, L = low level, X = irrelevant, Z = high impedance (off), Open = input disconnected or connected driver off

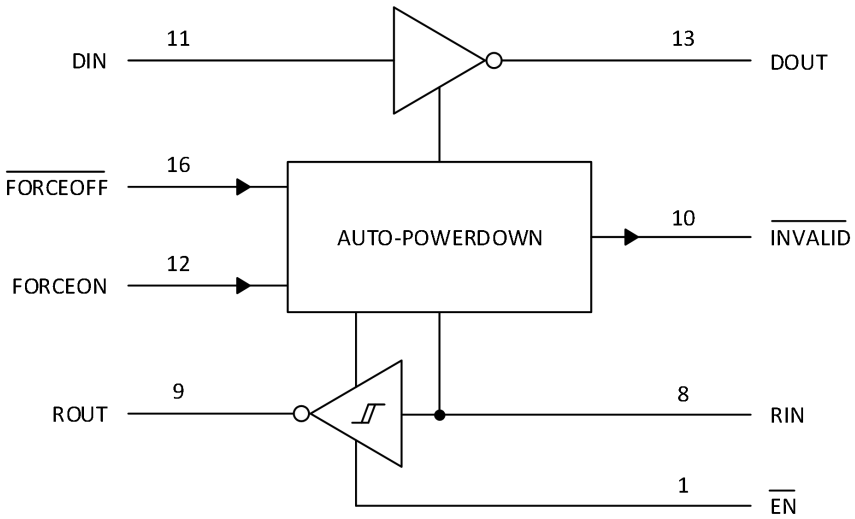

Figure 6. Logic Diagram

Copyright © GATEMODE Corp.

8 Applications Information

8.1 Application Information

The GM3221E line driver and receiver is a specialized device for 3V to 5.5V RS-232 communication applications. This application is a generic implementation of this device with all required external components. For proper operation, add capacitors as shown in Figure 7.

8.2 Typical Application

ROUT and DIN connect to UART or general purpose logic lines. FORCEON and $\overline{\text{FORCEOFF}}$ may be connected general purpose logic lines or tied to ground or V_{CC}. $\overline{\text{INVALID}}$ may be connected to a general purpose logic line or left unconnected. RIN and DOUT lines connect to a RS232 connector or cable. DIN, FORCEON, and $\overline{\text{FORCEOFF}}$ inputs must not be left unconnected.

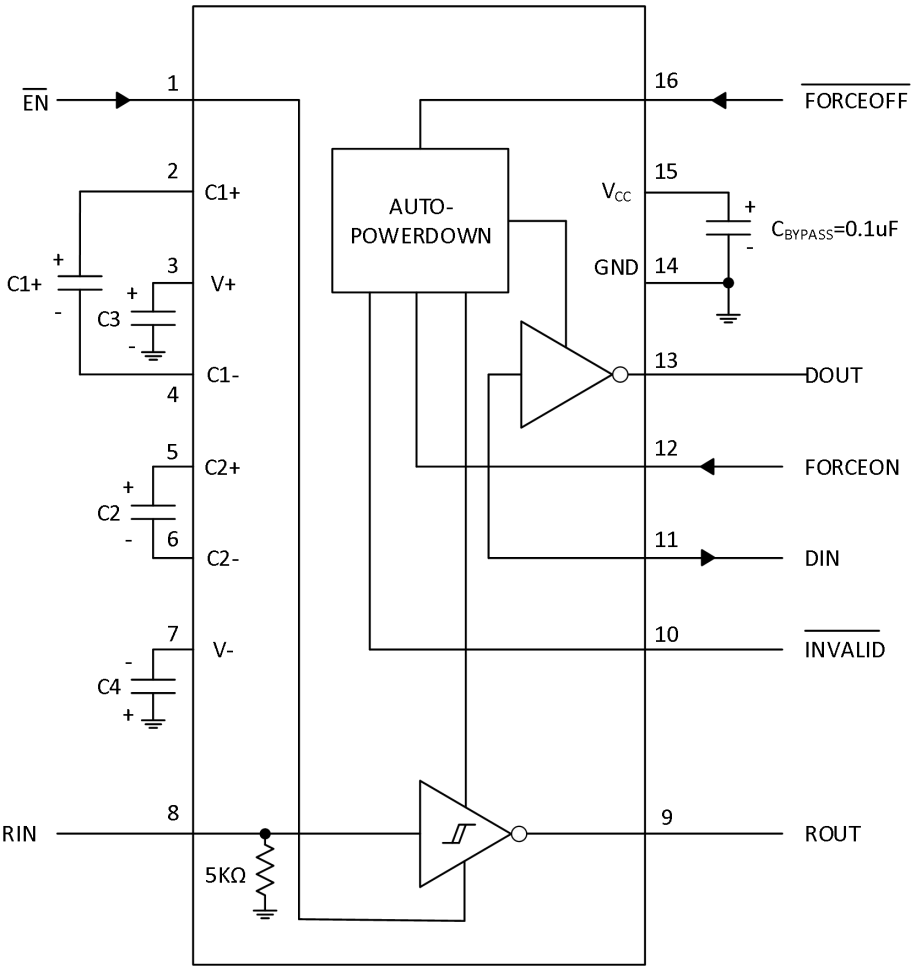

†：C3 can be connected to Vcc or GND

A. Resistor values shown are nominal.

B. Nonpolarized ceramic capacitors are acceptable. If polarized tantalum or electrolytic capacitors are used, they should be connected as shown.

Figure 7. Typical Operating Circuit and Capacitor Values

Copyright © GATEMODE Corp.

8.2.1 Design Requirements

For this design example, use the values in Table 4.

- Vcc minimum is 3V and maximum is 5.5V.
- Maximum recommended bit rate is 250kbps.
- Recommend capacitors as shpwn in Table4.

Table 4.Vcc vs Capacitor Values

Vcc	C1	C2,C3,and C4
3.3V ± 0.3V	0.1μF	0.1μF
5V ± 0.5V	0.047μF	0.33μF
3V to 5.5V	0.1μF	0.47μF

8.2.2 Detailed Design Procedure

GM3221E has integrated charge-pump that generates positive and negative rails needed for RS-232 signal levels. Main design requirement is that charge-pump capacitor terminals must be connected with recommended capacitor values. Charge-pump rail voltages and device supply pin must be properly bypassed with ceramic capacitors.

- DIN, $\overline{\text{FORCEOFF}}$ and FORCEON inputs must be connected to valid low or high logic levels.
- Select capacitor values based on V_{CC} level for best performance.

9 Power Supply Recommendations

The Vcc voltage must be connected to the same power source used for logic device connected to DIN and ROUT pins. Vcc must be between 3V and 5.5V.

10 Layout

As shown in Layout Example, charge-pump and supply voltage capacitors must be located very close to device pins. Non-polarized ceramic capacitors are recommended. If polarized tantalum or electrolytic capacitors are used, they should be connected as per Typical Operating Circuit and Capacitor Values.

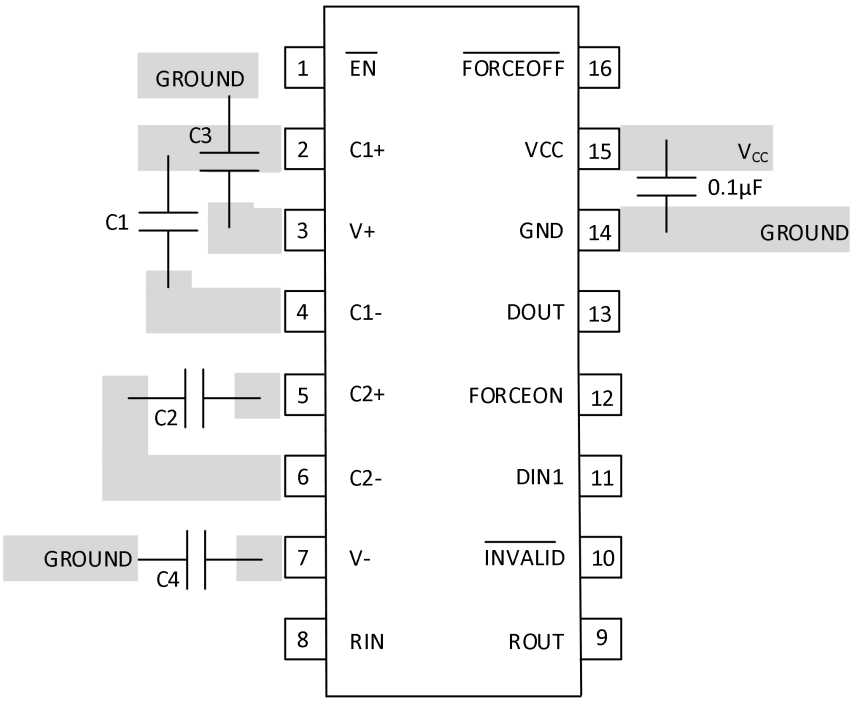

Figure 8. Example Layout

Copyright © GATEMODE Corp.

PACKAGE DIMENSION

SOP16

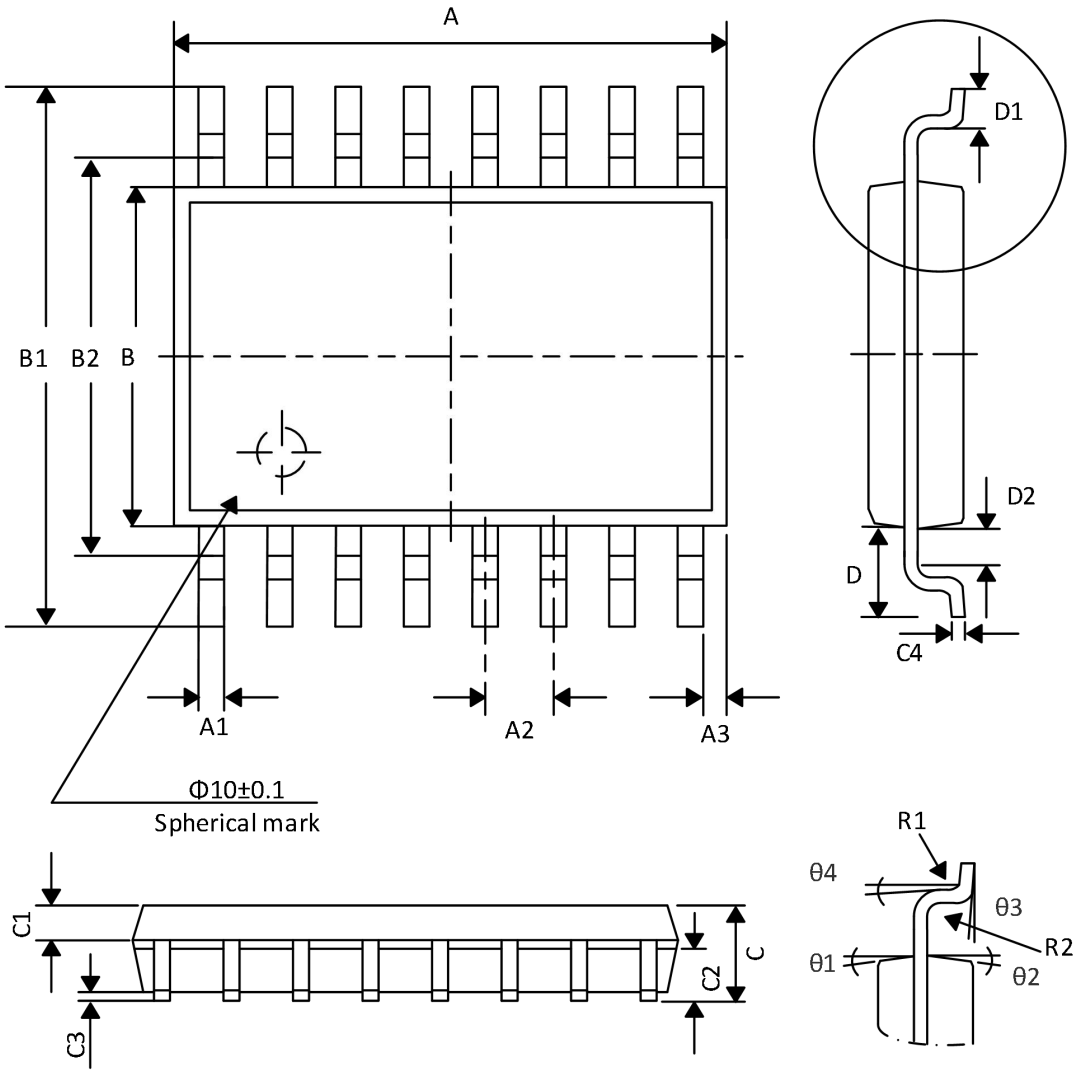

DIMENSION / SYMBOL	MIN（mm）	MAX（mm）	DIMENSION / SYMBOL	MIN（mm）	MAX（mm）
A	9.80	10.00	C4	0.203	0.233
A1	0.356	0.456	D	1.05TYP	
A2	1.27TYP		D1	0.40	0.70
A3	0.302TYP		D2	0.15	0.25
B	3.85	3.95	R1	0.20TYP	
B1	5.84	6.20	R2	0.20TYP	
B2	5.00TYP		θ1	8°~12°TYP4	
C	1.40	1.60	θ2	8°~12°TYP4	
C1	0.61	0.71	θ3	0°~8°	
C2	0.54	0.64	θ4	4°~12°	
C3	0.05	0.25			

Copyright © GATEMODE Corp.

TSSOP16

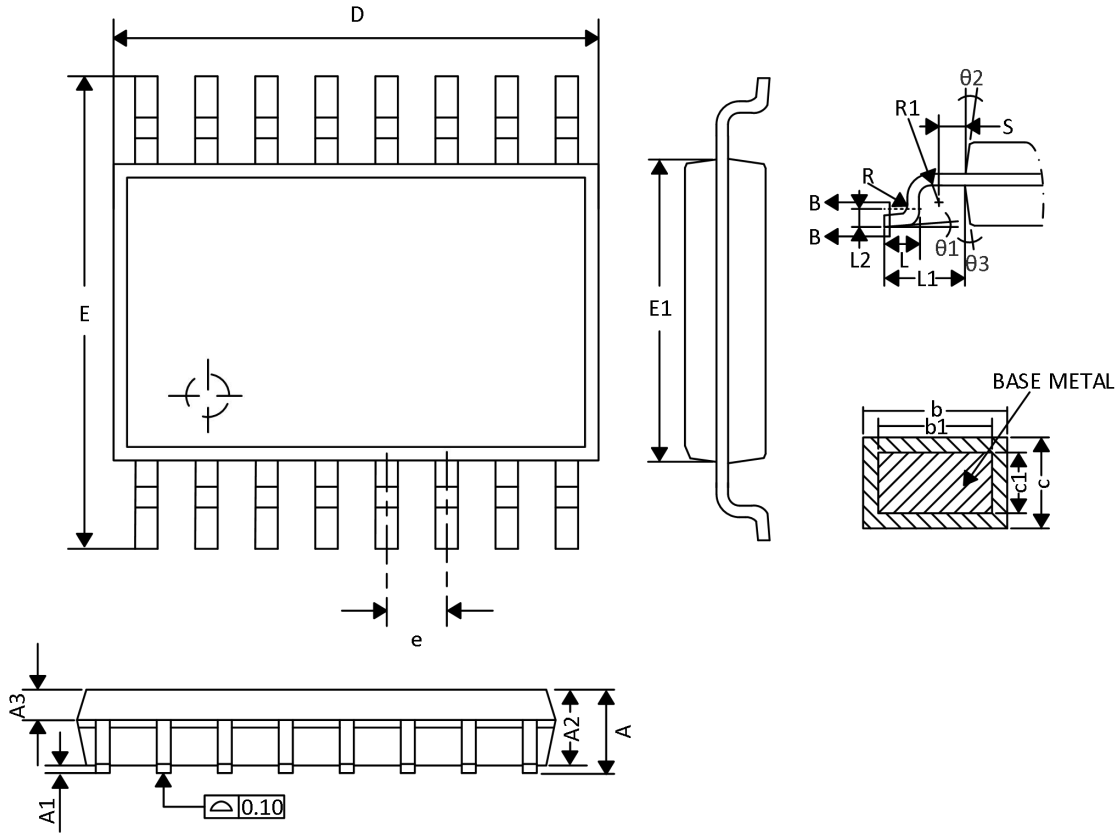

DIMENSION / SYMBOL	MIN (mm)	TYP (mm)	MAX (mm)	DIMENSION / SYMBOL	MIN (mm)	TYP (mm)	MAX (mm)
A	-	-	1.20	e		0.65BSC	
A1	0.05	-	0.15	L	0.45	0.60	0.75
A2	0.90	1.00	1.05	L1		1.00 REF	
A3	0.34	0.44	0.54	L2		0.25 BSC	
b	0.250	-	0.28	R	0.09	-	-
b1	0.20	0.22	0.24	R1	0.09	-	-
c	0.10	-	0.19	S	0.20	-	-
c1	0.10	0.13	0.15	θ1	0	-	8°
D	4.86	4.96	5.06	θ2	10°	12°	14°
E	6.20	6.40	6.06	θ3	10°	12°	14°
E1	4.30	6.40	4.50				

Copyright © GATEMODE Corp.

SSOP16-208mil

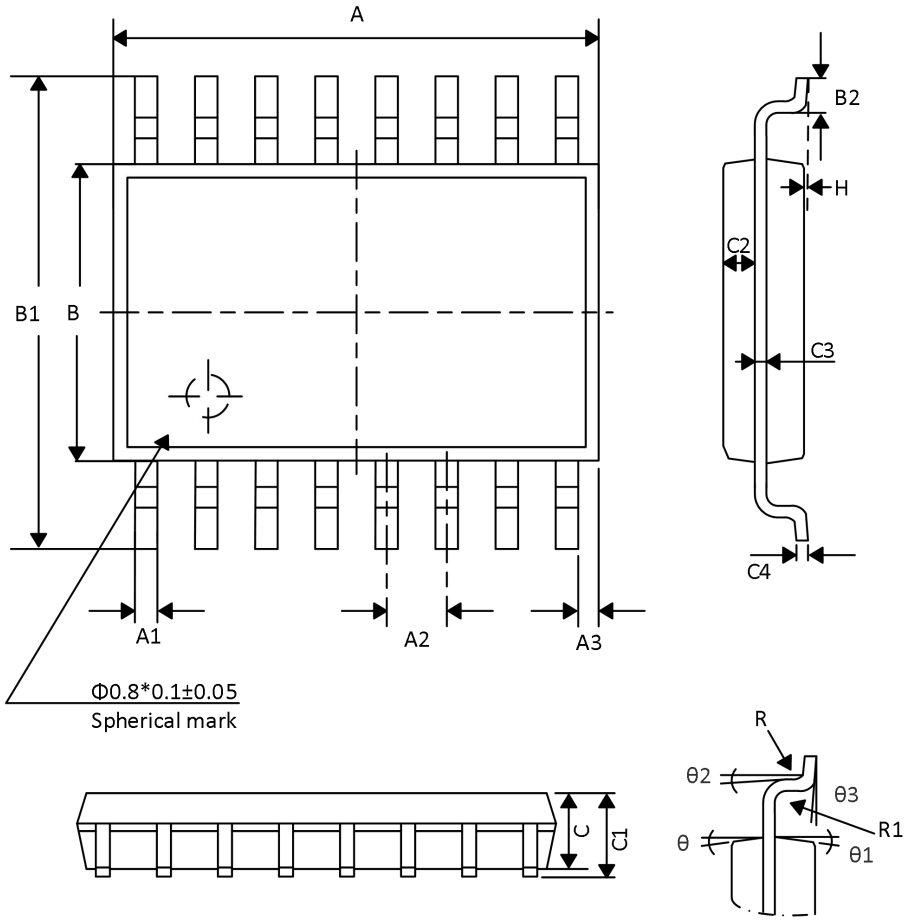

DIMENSION / SYMBOL	MIN（mm）	MAX（mm）	DIMENSION / SYMBOL	MIN（mm）	MAX（mm）
A	6.15	6.25	C3	0.152	
A1	0.30TYP		C4	0.172	
A2	0.65TYP		H	0.05	0.15
A3	0.675TYP		θ	12°TYP4	
B	5.25	5.35	θ1	12°TYP4	
B1	7.65	7.95	θ2	10°TYP	
B2	0.60	0.80	θ3	0°~8°	
C	1.70	1.80	R	0.20TYP	
C1	1.75	1.95	R1	0.15TYP	
C2	0.799				

Copyright © GATEMODE Corp.

Order Information

Order number	Package	Marking information	Operation Temperature Range	MSL Grade	Ship, Quantity	Green
GM3221ESA	SOP16	GM3221ESA	-40 to 125°C	3	T&R,2500	Rohs
GM3221ETA	TSSOP16	GM3221ETA	-40 to 125°C	3	T&R,2500	Rohs
GM3221EBA	SSOP16	GM3221EBA	-40 to 125°C	3	T&R,2500	Rohs

Copyright © GATEMODE Corp.

VERSION MODIFICATION RECORD

VERSION	MODIFY THE DESCRIPTION	PAGE	TIME	MODIFY PERSONNEL
1.1	1.Original:GM3221E_1.0 →GM3221E_1.1		2026-6-15	KANG
	2.Extended the recommended operating temperature range from –40°C to +85°C to –40°C to +125°C.	3		
	3.Revised the description of the operating temperature range in the ordering information to align with the extended range (–40°C to +125°C).	17	2026-6-15	KANG

Copyright © GATEMODE Corp.