TPSPX1117 Series

1A LOW DROPOUT LINEAR REGULATOR

Features

- Output Current of 1A Maximum
- Three-Terminal Adjustable or Fixed Outputs
- Maximum Input Voltage: 18V
- Fast Transient Response
- Current Limit, Safe Operating and Thermal Shutdown Protection
- Line Regulation: 0.2%
- Load Regulation: 0.4%
- Environment Temperature: -50°C~+140°C
- Available in SOT223-3

Application

- High Efficiency Linear Regulators
- Post Regulator for Switching DC/DC Converter
- Power Management for M/B and Graphic Card
- 2.85V Model for SCSI-2 Active Termination
- Battery Charger
- LCD Monitor and LCD TV
- DVD Decode Board
- ADSL Modem

Ordering Information

TPSPX1117M3-L-3-3

Output voltage: 15=1.5V
18=1.8V
25=2.5V
33=3.3V
50=5.0V
ADJ=fixed output

Package and Pin Configuration

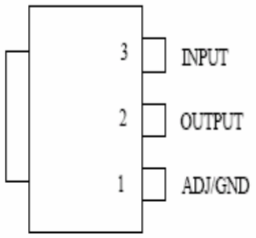

Absolute Maximum Ratings

Maximum Input Voltage	18V
Operating Junction Temperature (T_J)	150 °C
Environment Temperature (T_A)	140 °C
Storage Temperature Range (Ts)	-65 °C to 150 °C
Lead Temperature (soldiering, 10 seconds)	260 °C

Electrical Characteristics

V_{IN} = V_{OUT} +2V, I_O =10mA, and T_J = 25 C, unless otherwise specified.

Symbol	Parameter		Test Conditions	Min	Typ	Max	Unit
V_{REF}	Reference Voltage		I_{OUT} = 10mA, V_{IN} – V_{OUT} = 2V	1.238	1.250	1.262	V
			10mA≦I_{OUT}≦1A, 1.5V≦V_{IN}–V_{OUT}≦12V	1.225	1.250	1.275	
V_{OUT}	Output Voltage	1.8V	I_{OUT} = 10mA, V_{IN} = 3.8V, T_J = 25°C	1.782	1.80	1.818	V
			0≦I_{OUT}≦1A, 3.2V≦V_{IN}≦12V	1.764	1.80	1.836	
		2.5V	I_{OUT} = 10mA, V_{IN} = 4.5V, T_J = 25°C	2.475	2.50	2.525	
			0≦I_{OUT}≦1A, 3.9V≦V_{IN}≦12V	2.450	2.50	2.550	
		3.3V	I_{OUT} = 10mA, V_{IN} = 5V, T_J = 25°C	3.267	3.30	3.333	
			0≦I_{OUT}≦1A, 4.75V≦V_{IN}≦12V	3.234	3.30	3.366	
		5.0V	I_{OUT} = 10mA, V_{IN} = 7V, T_J = 25°C	4.95	5.00	5.05	
			0≦I_{OUT}≦1A, 6.5V≦V_{IN}≦12V	4.90	5.00	5.10	
ΔV_{OUT}	Line Regulation	ADJ	I_{OUT}=10mA, 1.5V≦V_{IN}–V_{OUT}≦13.775V		0.035	0.2	%
		Fixed	I_{OUT}=10mA, V_{OUT} +1.5V≦V_{IN}≦15V		9	12	mV
ΔV_{OUT}	Load Regulation	ADJ	V_{IN} – V_{OUT} = 3V, 10mA≦I_{OUT}≦1A		0.2	0.4	%
		Fixed	V_{IN} = V_{OUT} +1.5V,10mA≦I_{OUT}≦1A		3	10	mV
V_{IN}–V_{OUT}	Dropout Voltage	ΔV_{OUT}, ΔV_{REF} = 1%, I_{OUT} = 100mA			1.11	1.20	V
		ΔV_{OUT}, ΔV_{REF} = 1%, I_{OUT} = 500mA			1.18	1.25	V
		ΔV_{OUT}, ΔV_{REF} = 1%, I_{OUT} = 1A			1.26	1.30	V
I_{CL}	Current Limit	V_{IN} – V_{OUT} = 2V, T_J = 25°C		1.25	1.4	1.6	A
Minimum Load Current (Note 1)		Adjustable Version			5	10	mA
Iq	Quiescent Current	Fixed	V_{IN} – V_{OUT} = 1.25V		4	8	mA
I_{ADJ}	ADJ Pin Current				55	120	uA
Temperature Stability						0.5	%
θ_{JC}	Thermal Resistor	SOT-223			20		°C/

Typical Application

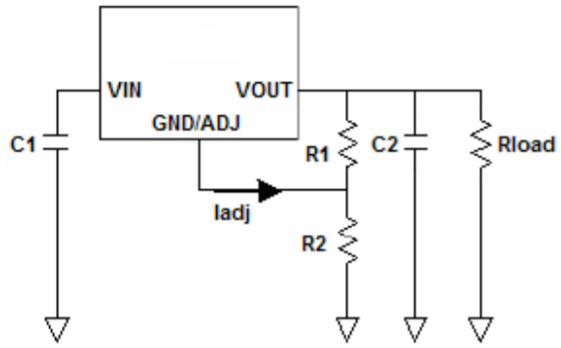

TP1117 adjustable output voltage

V_{OUT}=1.25V(1+R2/R1)

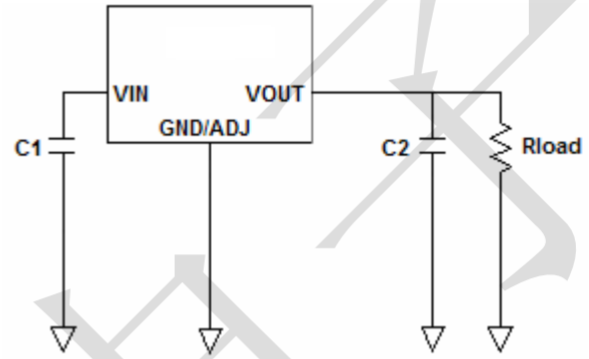

TP1117 fixed output

The TP1117 adjustable regulator provide 1.25V reference voltage. Any output voltage between 1.25V~13.8V can be available by choosing two external resistors.

Block Diagram

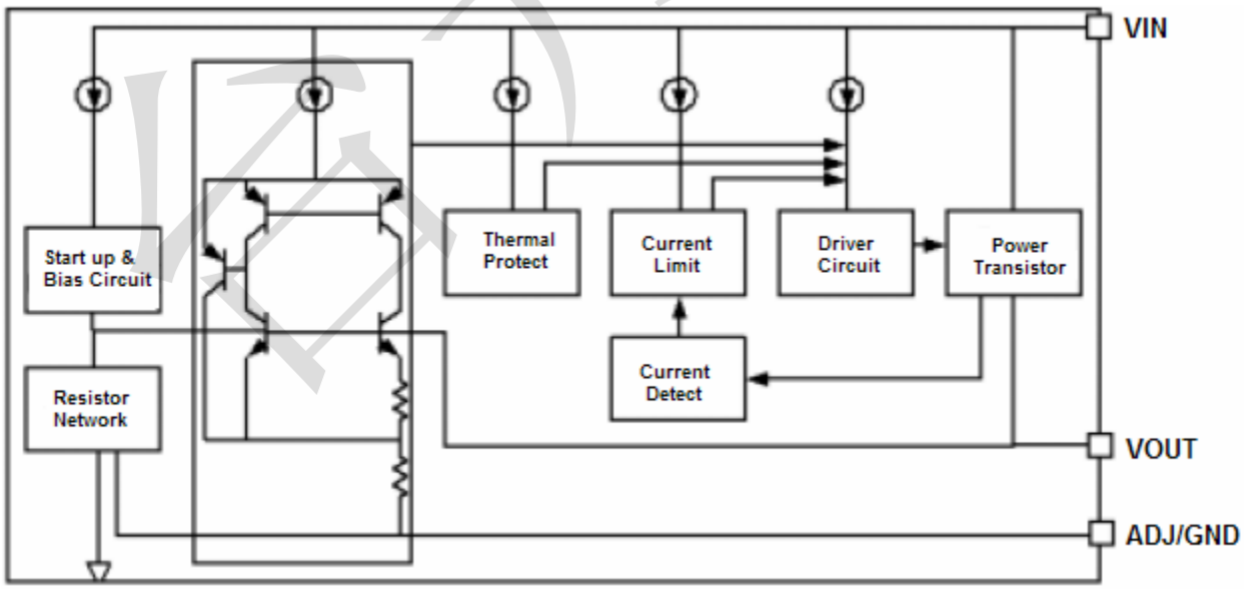

Typical Characteristics

1. Load Regulation

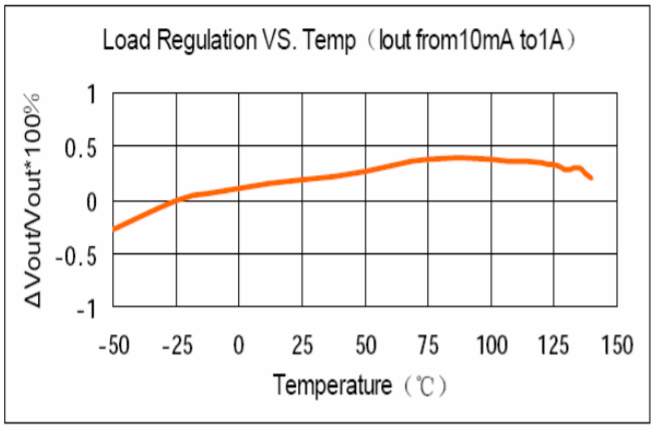

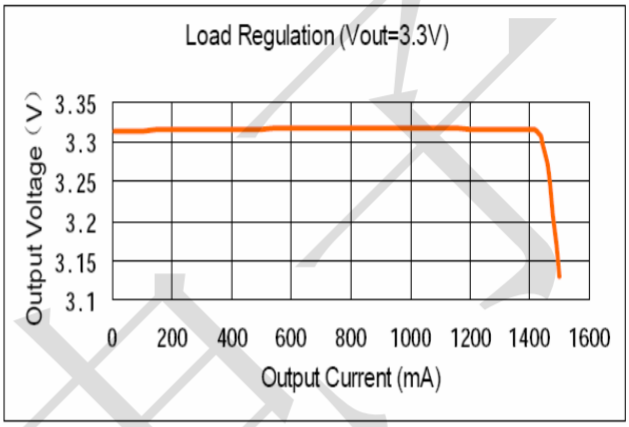

2. Line Regulation

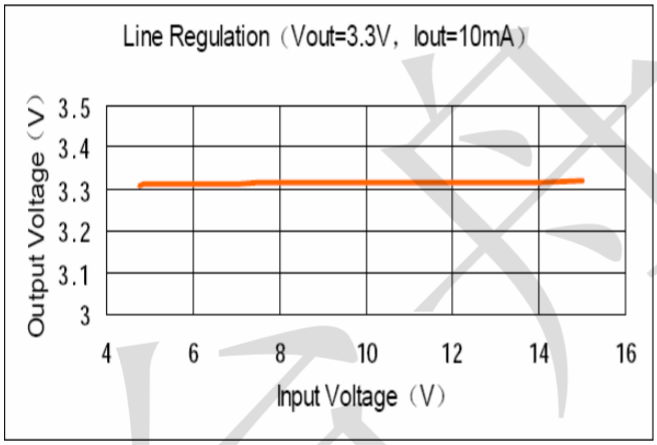

3. Dropout Voltage

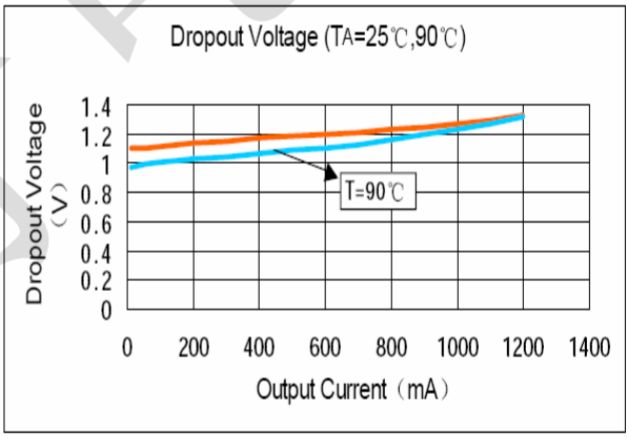

4. Temperature Stability

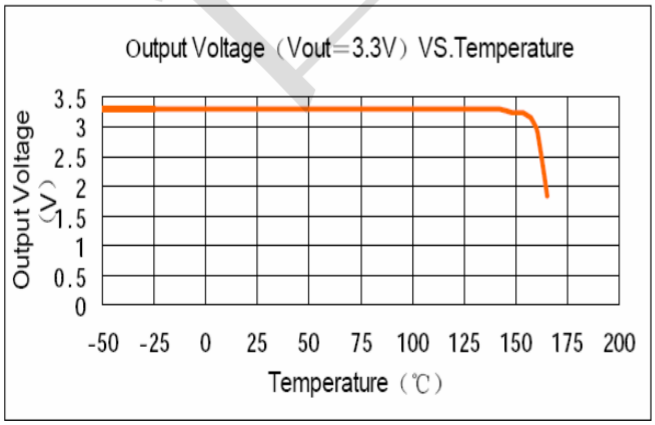

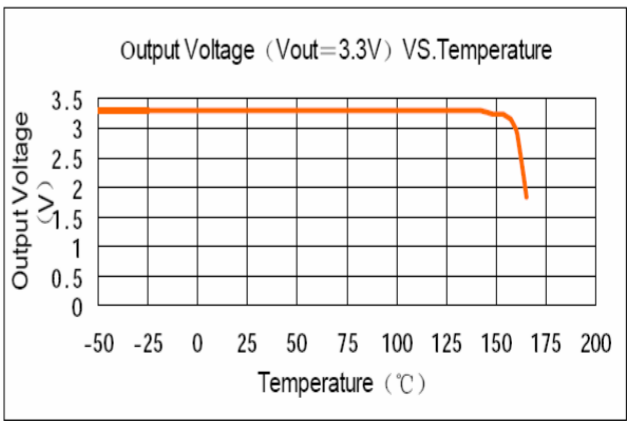

5. ADJ Pin Current vs. Temperture

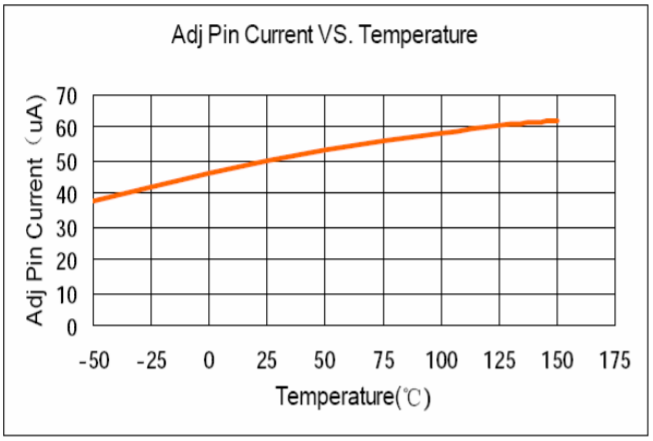

6. Load Transient Response

Load Current Change from 2mA to 500mA

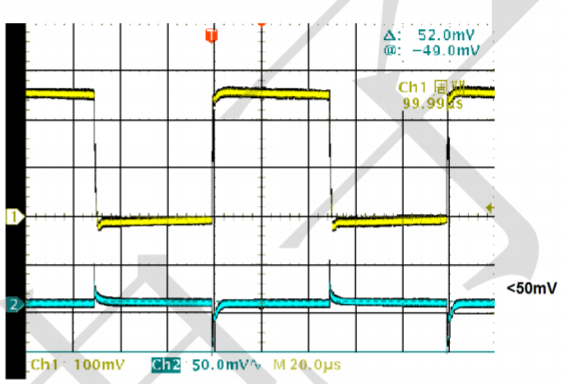

SOT223 Package Information

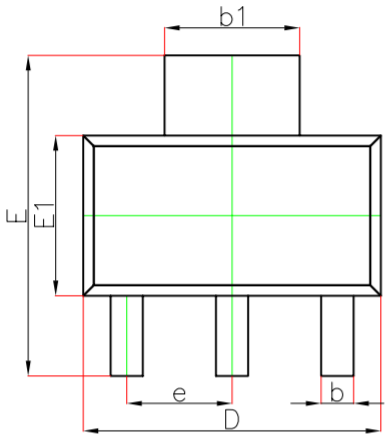

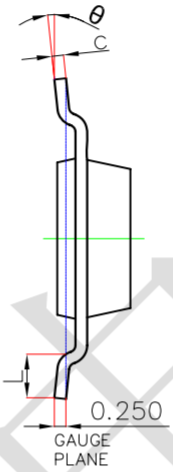

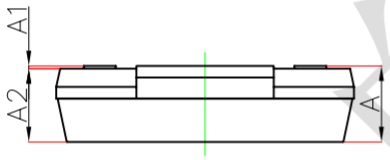

Symbol	Dimensions In Millimeters		Dimensions In Inches	
	Min.	Max.	Min.	Max.
A	——	1.800	——	0.071
A1	0.020	0.100	0.001	0.004
A2	1.500	1.700	0.059	0.067
b	0.660	0.840	0.026	0.033
b1	2.900	3.100	0.114	0.122
c	0.230	0.350	0.009	0.014
D	6.300	6.700	0.248	0.264
E	6.700	7.300	0.264	0.287
E1	3.300	3.700	0.130	0.146
e	2.300(BSC)		0.091(BSC)	
L	0.750	——	0.030	——
θ	0°	10°	0°	10°