广州市东裕光电科技有限公司

产品规格书
SPECIFICATION

客户名称 CUSTOMER	
产品名称 PRODUCTION	贴片　SMD
产品型号 MODEL	DYWH-19-217/BHC-ZL1M2RY/6T
版本号 VERSION NO	A1.0

厂址(Add)：广东省广州市番禺区石基镇海涌路 3 号 10 号厂房 2 楼

电话(Tel)：18038161512

传真(Fax)：020-39966833

网址(Net)：www.tonyuled.cn　www.tonyuled.com

客户确认 CUSTOMER CONFIRMATION	审　核 CHECKED BY	编　制 PREPARED BY
	邓晓军	区家俊

Copyright © 2024, TONYU All Rights Reserved.

DYWH-19-217/BHC-ZL1M2RY/6T

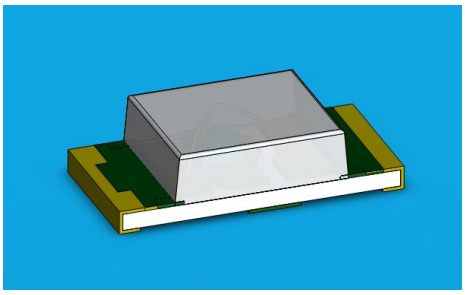

产品描述 Descriptions

- 外观尺寸 （L/W/H）：1.6×0.8×0.4mm
- 发光颜色 ：蓝色

产品特性 Features

- 发光强度高，功耗低 (High Luminous Intensity ,Low Power Dissipation,)
- 可靠性好，使用寿命长 (Good Reliability and Long Life)
- 无铅 (Pb free)
- 符合 RoHS 要求 (This product itself will remain within RoHS compliant version)

产品应用 Applications

- 智能手机、GPS 和平板电脑的背光 (Backlight for Smart phones, GPS and Tablet PCs.)
- 情景照明 (Scene lighting)
- 键盘灯 (Keyboard light）
- 一般应用 (General use)

包装方式 Packing Quantity Specification

- 编带数量:6000 个/卷 (Loaded quantity: 6000 pcs/reel)

Copyright © 2024, TONYU All Rights Reserved.

一、外形尺寸及建议焊盘尺寸 Package Profile & Soldering PAD Suggested

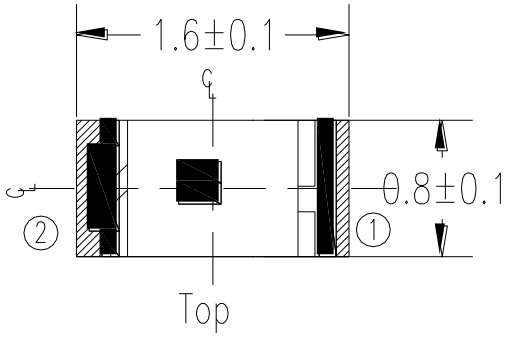

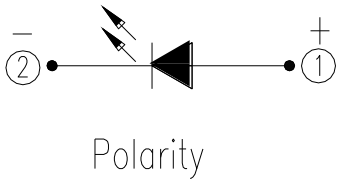

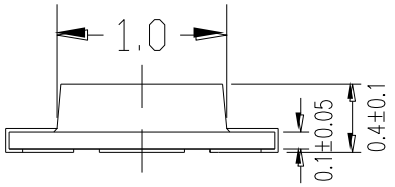

Recommend Sodering Pad

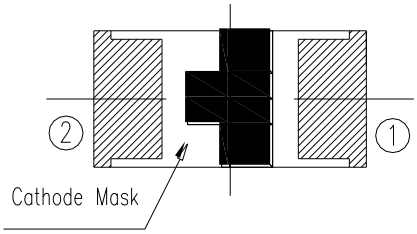

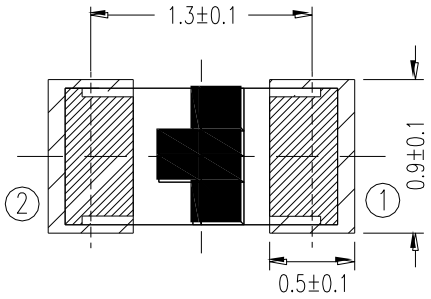

Suggested pad dimension is just for reference only.
Please modify the pad dimension based on individual need.

注：所有尺寸均为毫米，除非另有说明，公差为±0.1。
Notes: All dimensions are in mm, tolerance is ±0.1 unless otherwise noted.

单位 Unit	公差 Tolerance	芯片材料 Die material	发光颜色 Emission color	胶体颜色 Lens color
mm	±0.1mm	InGaN	Blue	Water Clear

※备注：承认书之编号和型号可用于查询，客户如有需要，请提供相应的编号和型号。
Remark：P/N & Model in samples approval sheet can be used to inquire，please provide corresponding P/N & model if customer need.

Copyright © 2024, TONYU All Rights Reserved.

二、光电参数 Electro-Optical Characteristics：

（环境温度 Ambient temperature：25℃，环境湿度 Humidity：RH60%）

Parameter	Symbol	Min.	Typ.	Max.	Unit	Condition
Luminous Intensity	Iv	11.5	-----	28.5	mcd	I_F=5mA
Viewing Angle	$2\theta_{1/2}$	-----	120	-----	deg	
Peak Wavelength	λp	-----	468	-----	nm	
Dominant Wavelength	λd	465.0	-----	475.0	nm	
Spectrum Radiation Bandwidth	△λ	-----	25	-----	nm	
Forward Voltage	V_F	2.50	-----	3.10	V	
Reverse Current	I_R	-----	-----	50	μA	V_R=5V

注(Notes)：*正向电压公差范围(Forward voltage tolerance)：±0.1v

*光强度公差范围(Luminous intensity tolerance)：±10%

*波长公差范围(wavelength tolerance)：±1.0nm

Copyright © 2024, TONYU All Rights Reserved.

三、产品等级 Product Binning

Bin Range of Luminous Intensity

Bin Code	Min.	Max.	Unit	Condition
L1	11.5	14.5	mcd	I_F =5mA
L2	14.5	18.0		
M1	18.0	22.5		
M2	22.5	28.5		

Bin Range Of Dom. Wavelength

Bin Code	Min.	Max.	Unit	Condition
X	465.0	470.0	nm	I_F =5mA
Y	470.0	475.0		

Bin Range Of Forward Voltage

Bin Code	Min.	Max.	Unit	Condition
9	2.50	2.70	V	I_F =5mA
10	2.70	2.90		
11	2.90	3.10		

Copyright © 2024, TONYU All Rights Reserved.

四、典型光电特性曲线图 Typical photoelectricity characteristic curve chart：

Spectrum Distribution

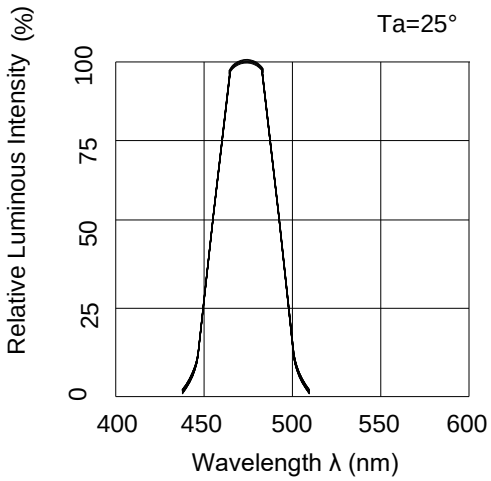

Forward Current vs. Forward Voltage

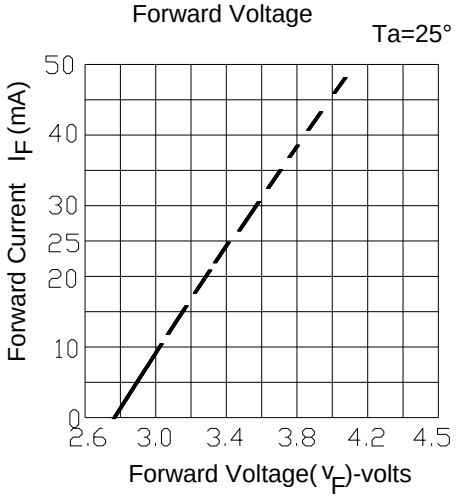

Relative Luminous Intensity vs. Ambient Temperature

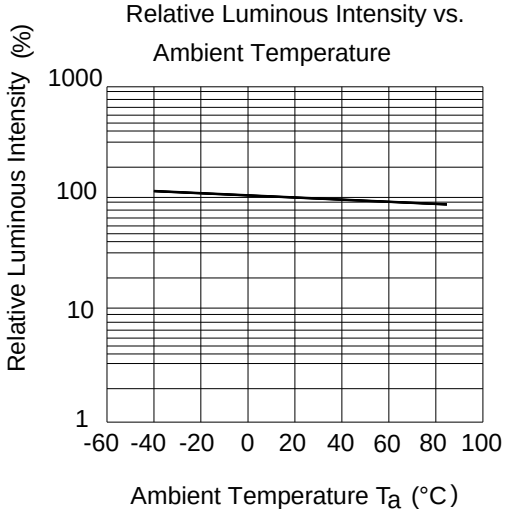

Relative Luminous Intensity vs Forward Current

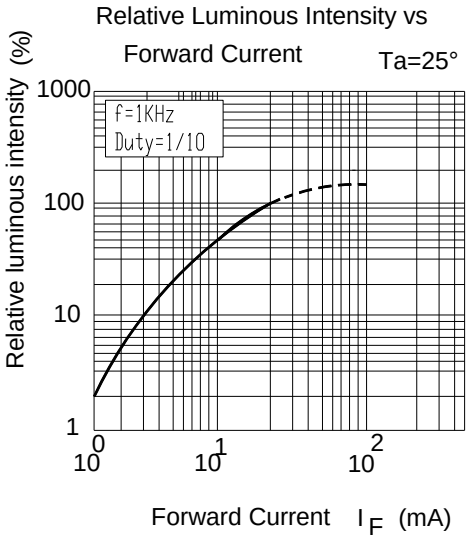

Forward Current Derating Curve

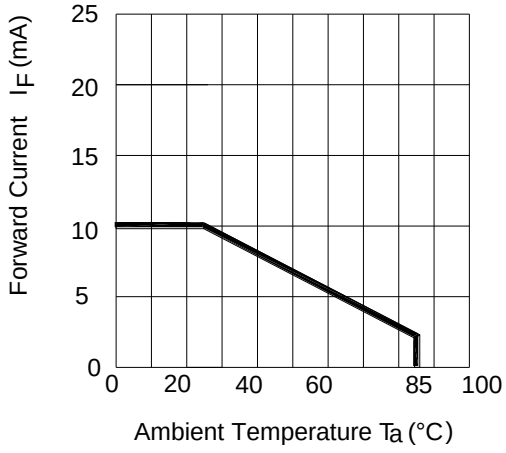

Radiation Diagram

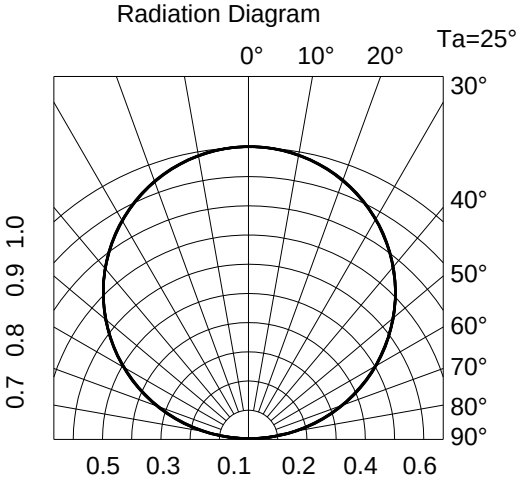

Copyright © 2024, TONYU All Rights Reserved.

五、极限参数 Absolute Maximum Rating：

（环境温度 Ambient temperature：25℃，环境湿度 Humidity：RH60%）

项目 Item	符号 Symbol	数值 Value	单位 Unit	备注 Remark
正向电流 Forward Current	IF	10	mA	---
正向峰值电流 Peck forward current	IFp	40	mA	F=1KHZ,占空比(duty cycle)1/10
反向耐压 Reverse Voltage	VR	5	V	---
耗散功率 Power Dissipation	Pd	40	mW	---
工作环境温度 Operation temperature	Tamb	-40 至+85	℃	---
贮藏温度 Storage temperature	Tstg	-40 至+90	℃	---
焊接温度 Soldering temperature	Tsol	260	℃	回流焊：Reflow soldering : 260 ℃ for 10 sec. 手工焊接：Hand Soldering : 350 ℃ for 3 sec.
Notes*1: IFP Conditions-Pulse Width≤100μs and Duty≤1%				

Copyright © 2024, TONYU All Rights Reserved.

六、包装载带与圆盘尺寸 Package carrier and disk dimensions

1. 卷轴包装：6000pcs/卷 Packing quantity: 6000 PCS/rolls

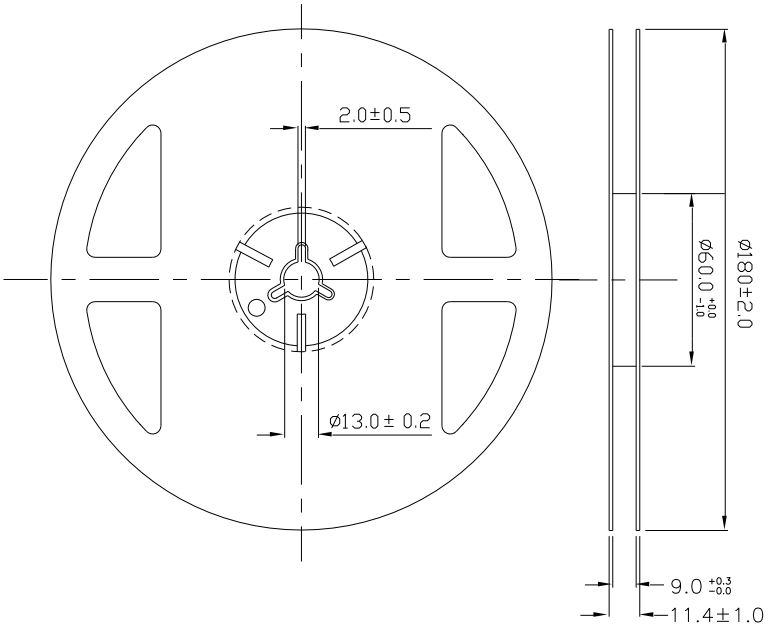

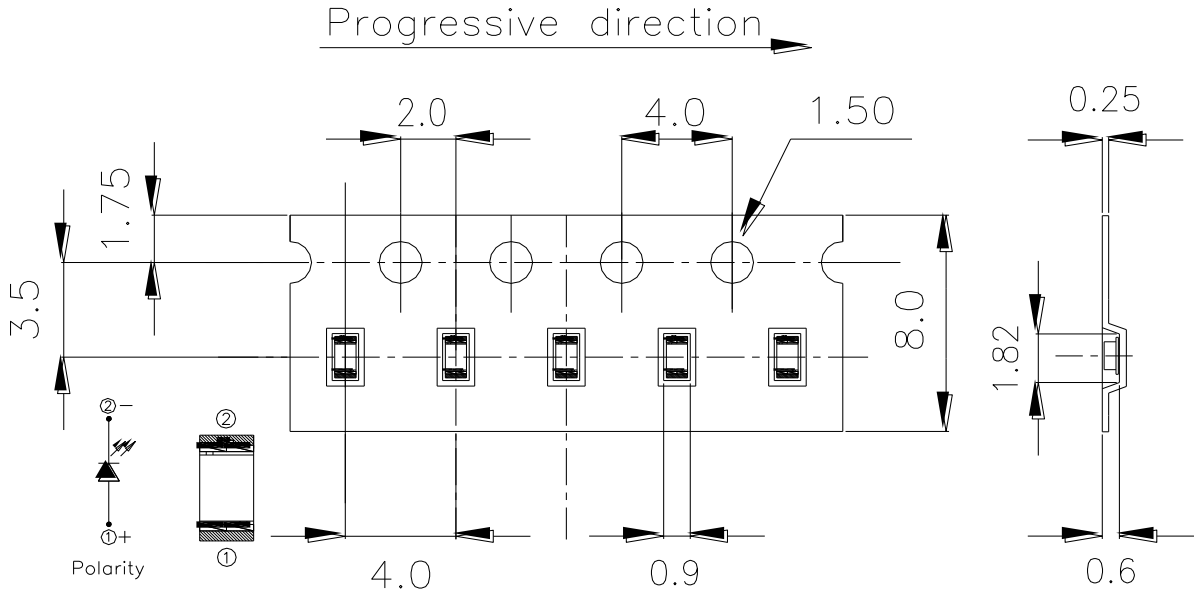

产品包装及外标签 Moisture Resistant Packaging:

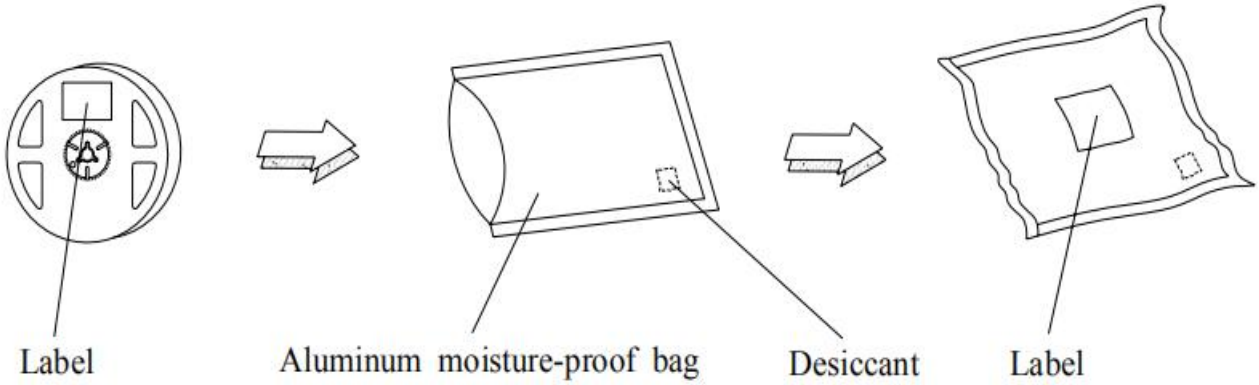

Copyright © 2024, TONYU All Rights Reserved.

七、可靠性实验项目 Reliability Test Project

描述 Description	项目 Item	测试标准 Test Criterion	测试条件 Test Condition	测试时间 Test Time	数量 Qty.	失效数量 Fail Qty.
寿命测试 Life Test	常温寿命测试 Life test (room temperature)	JIS7021:B4	Ta=25℃±5℃，IF=1mA	1000Hrs	22	0
环境测试 Ambience Test	高温存储 High temperature store	JIS7021:B10 MIL-STD-202:210A MIL-STD-750:2031	Ta=85℃±5℃	1000Hrs	22	0
	低温存储 Low temperature store	JIS7021:B12	Ta= -35℃±5℃	1000Hrs	22	0
	高温高湿测试 High temperature/ humidity test	JIS7021:B11 MIL-STD-202:103D	Ta=85℃±5℃ RH=85%	1000Hrs	22	0
	冷热冲击测试 Cold / Heat strike test	JIS7021:B4 MIL-STD-202:107D MIL-STD-750:1026	30min -10℃±5℃←→100℃±5℃ 5min 5min	50Cycles	22	0
	冷热循环测试 Cold and heat cycle test	JIS7021:A3 MIL-STD-202:107D MIL-STD-705:105E	5min 5min 5min -35℃～25℃～85℃～-35℃ 30min 5min 30min 5min	50Cycles	22	0

八、失效判定标准 Criteria For Judging Damage

Test Items 项目	Symbol 符号	Test Condition 测试条件	Judging For Damage 判定标准	
			Min. 最小	Max. 最大
Forward Voltage 正向电压	VF	IF=5mA	--	U.L*x1.1
Reverse Current 反向电流	IR	VR = 5V	--	U.L*x2.0
Luminous Intensity 光强	Mcd	IF=5mA	L.L*x0.7	--

U.L: Upper standard level 规格Max
L.L: Lower standard level 规格Min

Copyright © 2024, TONYU All Rights Reserved.

九、注意事项 Note

1. Over-current-proof
Customer must apply resistors for protection, otherwise slight voltage shift will cause big current change (Burn out will happen).

2. Storage
2.1 Do not open moisture proof bag before the products are ready to use.
2.2 After opening the package: The LEDs should be kept at 30℃ or less and 60%RH or less.
2.3 The LEDs should be used within 168 hours (7days) after opening the package .
If unused LEDs remain, it should be stored in moisture proof packages.
2.4 If the moisture absorbent material (silica gel) has faded away or the LEDs have exceeded the storage time, baking treatment should be performed using the following conditions.
Baking treatment : 60±5℃ for 24 hours.

3. Soldering Condition
3.1 Pb-free solder temperature profile

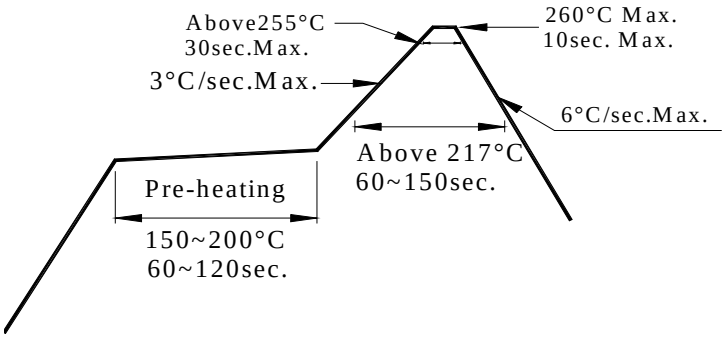

3.2 Reflow soldering should not be done more than two times.
3.3 When soldering, do not put stress on the LEDs during heating.
3.4 After soldering, do not warp the circuit board.

4.Soldering Iron
Each terminal is to go to the tip of soldering iron temperature less than 350℃ for 3 seconds within once in less than the soldering iron capacity 25W. Leave two seconds and more intervals, and do soldering of each terminal. Be careful because the damage of the product is often started at the time of the hand solder.

5.Repairing
Repair should not be done after the LEDs have been soldered. When repairing is unavoidable, a double-head soldering iron should be used (as below figure). It should be confirmed beforehand whether the characteristics of the LEDs will or will not be damaged by repairing.

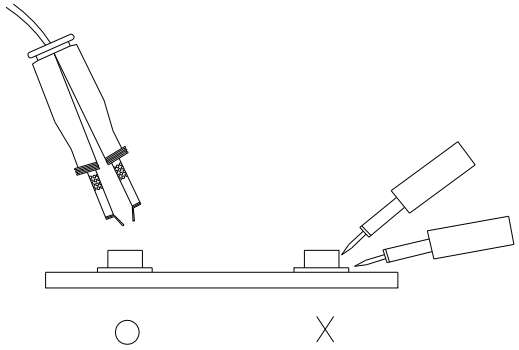

Application Restrictions

High reliability applications such as military/aerospace, automotive safety/security systems, and medical equipment may require different product. If you have any concerns, please contact Everlight before using this product in your application. This specification guarantees the quality and performance of the product as an individual component. Do not use this product beyond the

Copyright © 2024, TONYU All Rights Reserved.