深圳东裕光大电子有限公司
广州市东裕光电科技有限公司

产品规格书
SPECIFICATION

客户名称 CUSTOMER	
产品名称 PRODUCTION	0603贴片白灯
产品型号 MODEL	DYWH-19-213UWC-FR1FR8-4T
版本号 VERSION NO	A1.0

地址(Add)：深圳市光明区凤凰街道光明大道 481 号乐府广场 1B 栋 1609

厂址(Add)：广东省广州市番禺区石基镇海涌路 3 号 10 号厂房 2 楼

电话(Tel)：18038161512

传真(Fax)：020-39966833

网址(Net)：www.tonyuled.cn　　www.tonyuled.com

客户确认 CUSTOMER CONFIRMATION	审　核 CHECKED BY	编　制 PREPARED BY
	周毅兴	陈少龙

Copyright © 2024, TONYU All Rights Reserved.

产品描述 Descriptions

- 本产品主要作为信号指示及照明的电子元件广泛应用于各类使用表面贴装结构的电子产品中。本产品主要作为工业白光固化和一般的白光应用。
  (This product is generally used as indicator and luminary for electronic equipment. And it This product is mainly used as industrial White curing and general White applications.）

产品特性 Features

- 发光强度高，功耗低 (High Luminous Intensity ,Low Power Dissipation,)
- 可靠性好，使用寿命长 (Good Reliability and Long Life)
- 封装材料：硅胶 (Encapsulation：Silicone)
- 无铅 (Pb free)
- 符合 RoHS 要求 (This product itself will remain within RoHS compliant version)

产品应用 Applications

- 办公室和家庭设备的指示灯 (Indicatorand back light in office and family equipment.)
- LCD 背光源 (LCD Back Light)
- 光管应用 (Light pipe application）
- 一般应用 (General use)

包装方式 Packing Quantity Specification

- 编带 4000 个/卷 (4000PCS/rolls)

Copyright © 2024, TONYU All Rights Reserved.

一、外形图 Outline dimensions：

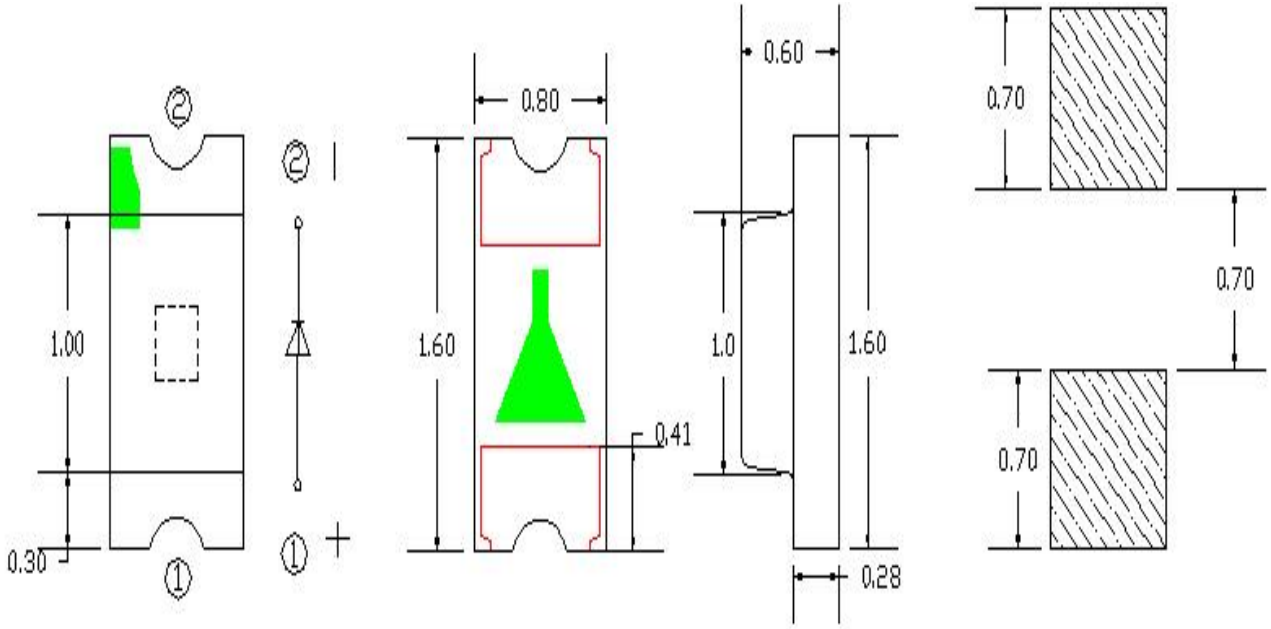

注：所有尺寸均为毫米，除非另有说明，公差为±0.1。
Notes: All dimensions are in mm, tolerance is ±0.1 unless otherwise noted.

单位 Unit	公差 Tolerance	芯片材料 Die material	发光颜色 Emission color	胶体颜色 Lens color
mm	±0.15mm	InGaN	White	Yellow planar colloid

※备注：承认书之编号和型号可用于查询，客户如有需要，请提供相应的编号和型号。
Remark：P/N & Model in samples approval sheet can be used to inquire，please provide corresponding P/N & model if customer need.

Copyright © 2024, TONYU All Rights Reserved.

二、光电参数 Electro-Optical Characteristics：

（环境温度 Ambient temperature：25℃，环境湿度 Humidity：RH60%）

项目 Item	符号 Symbol	测试条件 Testcondition	最小值 Min.	典型值 Type	最大值 Max..	单位 Unit.
正向电压 Forward voltage	VF	IF=5mA	2.6	–	3.1	V
反向电流 Reverse current	IR	VR=5V	–	–	10	μA
发光强度 Luminous intensity	IV	IF=5mA	175	–	430	Mcd
色坐标 Color coordinates	X/Y	IF=5mA	–	0.335/0.35	–	nm
视 角 Viewing Angle	Θ1/2	IF=5mA	–	120	–	deg
半波宽 Spectral Line Half-Width	Δλ	IF=5mA		15		nm
色温 Color Temperature	CCT	IF=5mA	6076		11194	K

Copyright © 2024, TONYU All Rights Reserved.

三、光电参数分 BIN 规格/Photoelectric parameters are divided into BIN specifications

3.1.亮度分 BIN 规格/Brightness Bin specifications

Bin	Min	Max	Unit	Condition
P23	175	210	Mcd	IF = 5mA
P24	210	250		
P25	250	300		
P26	300	360		
P27	360	430		

Notes: Tolerance of Luminous Intensity: ± 10%

3.2.电压分 BIN 规格/ Voltage sub Bin specification

Bin	Min	Max	Unit	Condition
VM	2.6	2.7	V	IF = 5mA
VN	2.7	2.8		
VO	2.8	2.9		
VP	2.9	3.0		
VQ	3.0	3.1		

Notes: Tolerance of Forward Voltage: ± 0.05V

3.3、色区分 BIN 规格/Color distinguishes Bin specifications

新标准	X1	Y1	X2	Y2	X3	Y3	X4	Y4	色温（K)
FR1	0.2778	0.2698	0.2863	0.2648	0.291	0.2747	0.2825	0.2796	9828-11194
FR2	0.2825	0.2796	0.291	0.2747	0.2957	0.2846	0.2872	0.2894	8841-9828
FR3	0.2872	0.2894	0.2957	0.2846	0.3004	0.2945	0.2919	0.2992	8095-8841
FR4	0.2919	0.2992	0.3004	0.2945	0.3052	0.3044	0.2966	0.309	7506-8095
FR5	0.2966	0.309	0.3052	0.3044	0.3099	0.3142	0.3013	0.3188	7042-7506
FR6	0.3013	0.3188	0.3099	0.3142	0.3146	0.3241	0.306	0.3286	6661-7042
FR7	0.306	0.3286	0.3146	0.3241	0.3193	0.334	0.3107	0.3384	6344-6661
FR8	0.3107	0.3384	0.3193	0.334	0.324	0.3439	0.3154	0.3482	6076-6344

Notes: color coordinate tolerance:±0.005

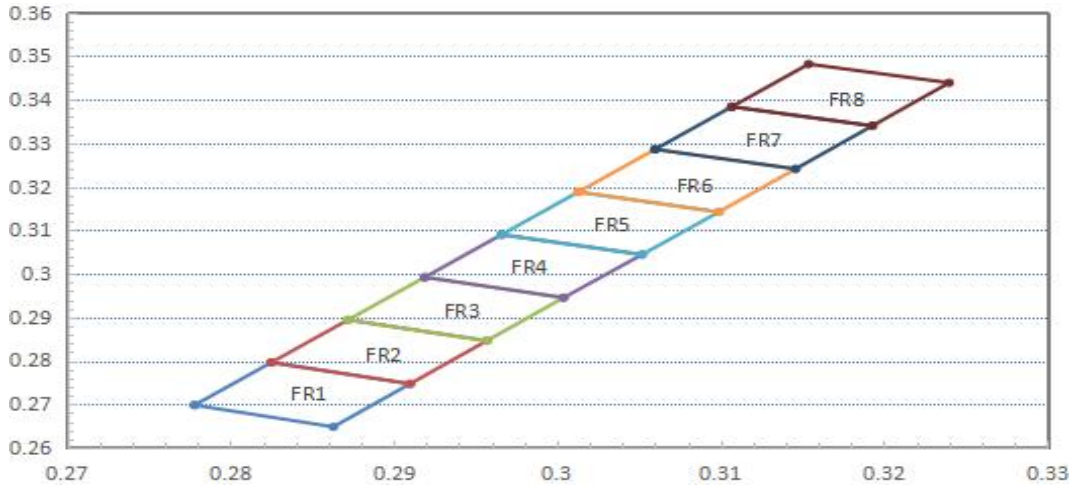

Copyright © 2024, TONYU All Rights Reserved.

四、典型光电特性曲线图 Typical photoelectricity characteristic curve chart：

伏安特性曲线
Forward Current VS. Forward Voltag (Ta=25℃)

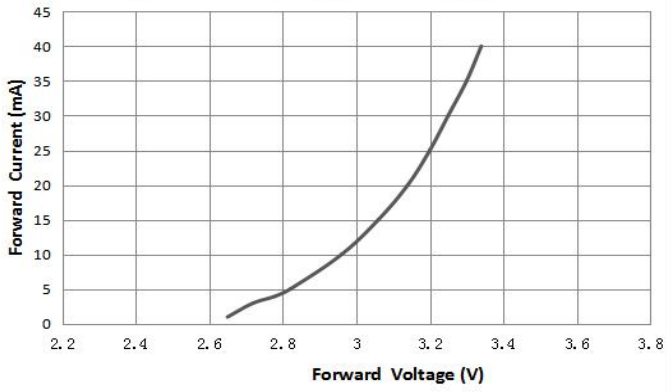

光谱分布特性曲线
Spectrum Distribution (Ta=25℃)

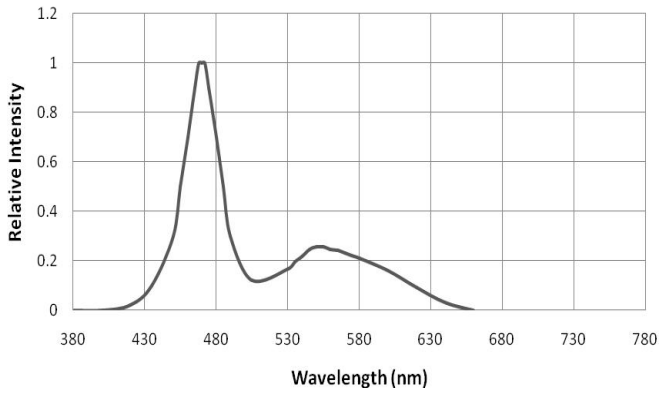

相对光强与环境温度特性曲线
Relative Intensity VS. Ambient Temperature (Ta=25℃)

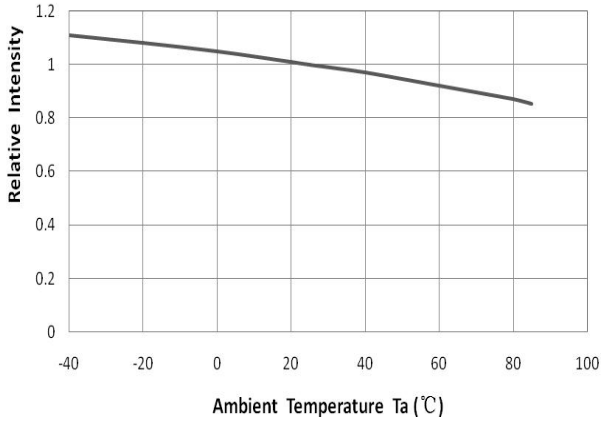

相对光强与电流特性曲线
Relative Intensity VS. Forward Current (Ta=25℃)

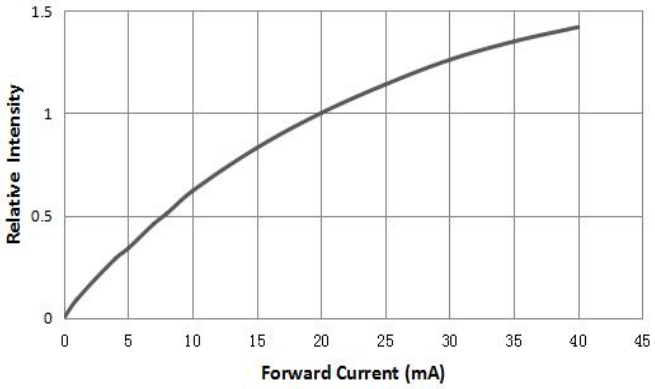

最大正向电流与环境温度特性曲线
Maximum Forward Current VS. Ambient temperature

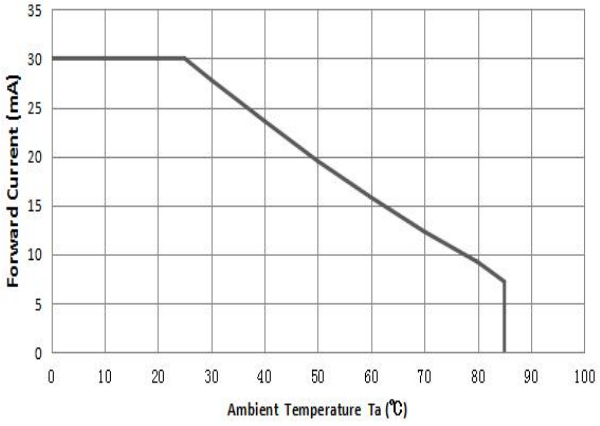

辐射特性曲线
Diagram characteristics of radiation

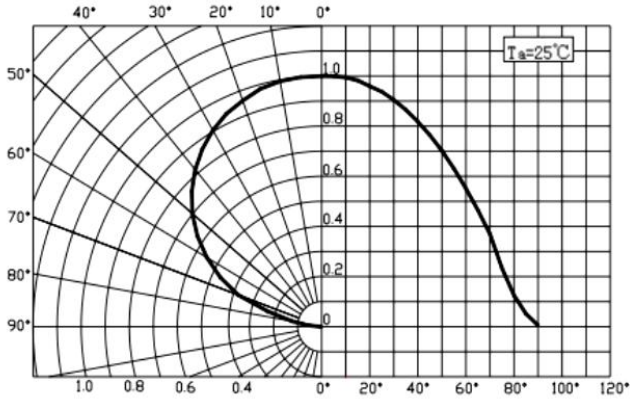

Copyright © 2024, TONYU All Rights Reserved.

五、极限参数 Absolute Maximum Rating：

（环境温度 Ambient temperature：25℃，环境湿度 Humidity：RH60%）

项目 Item	符号 Symbol	数值 Value	单位 Unit	备注 Remark
正向电流 Forward Current	IF	30	mA	---
正向峰值电流 Peck forward current	IFp	60	mA	F=1KHZ,占空比(duty cycle)1/10
反向耐压 Reverse Voltage	VR	5	V	---
耗散功率 Power Dissipation	Pd	100	mW	---
工作环境温度 Operation temperature	Tamb	-40 至+85	℃	---
贮藏温度 Storage temperature	Tstg	-40 至+85	℃	---
热阻 (结到焊点) Thermal resistance	RthJ-S	30	℃/W	
结温 Junction Temperature	Tj	125	℃	
焊接温度 Soldering temperature	Tsol	260	℃	回流焊 Reflow soldering : 260 ℃ for 10 sec. 手动焊 Hand soldering : 300°C for 3 sec.
Notes*1: IFP Conditions-Pulse Width≤100μs and Duty≤1%				

Copyright © 2024, TONYU All Rights Reserved.

六、包装载带与圆盘尺寸 Package carrier and disk dimensions

包装数量：4000 pcs/卷 Packing quantity: 4000 PCS/rolls

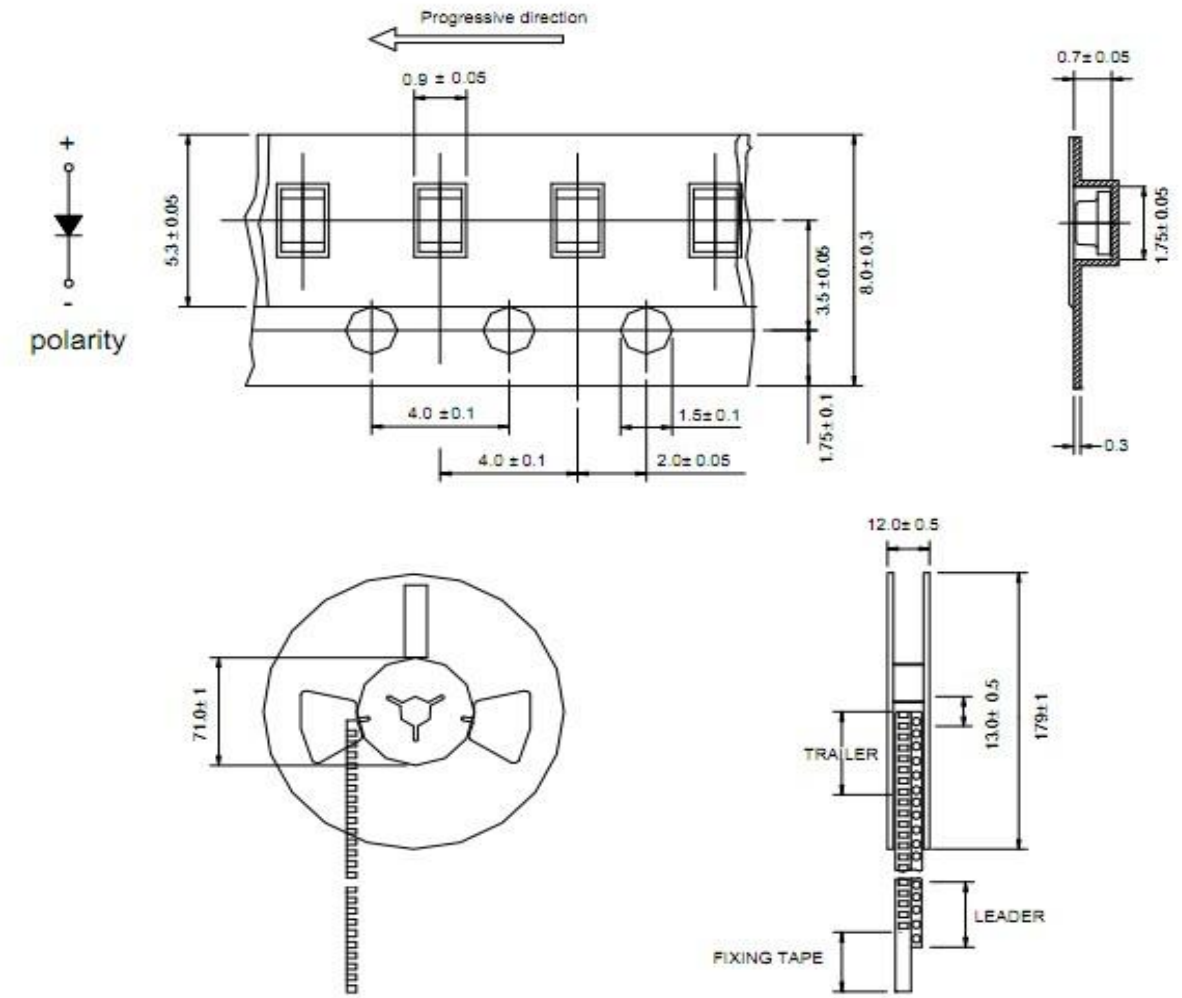

注：所有尺寸均为毫米，除非另有说明，公差为±0.1。

Notes: All dimensions are in mm, tolerance is ±0.1 unless otherwise noted.

标签及标识/ Label Explanation：

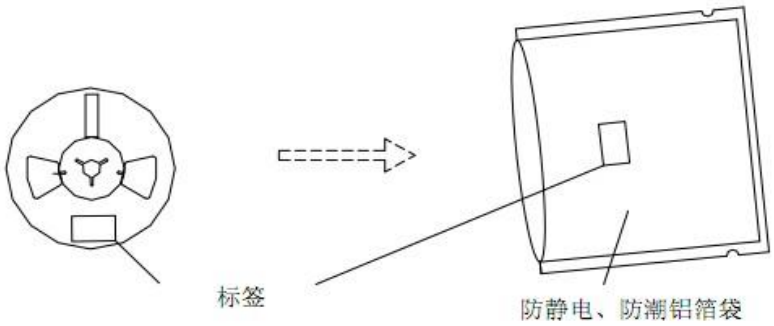

The label Anti-static, moisture-proof aluminum foil bag

Copyright © 2024, TONYU All Rights Reserved.

七、可靠性实验项目 Reliability Test Project

描述 Description	项目 Item	测试标准 Test Criterion	测试条件 Test Condition	测试时间 Test Time	数量 Qty.	失效数量 Fail Qty.
寿命测试 Life Test	常温寿命测试 Life test (room temperature)	JIS7021:B4	Ta=25℃±5℃，IF=20mA	1000Hrs	22	0
环境测试 Ambience Test	高温存储 High temperature store	JIS7021:B10 MIL-STD-202:210A MIL-STD-750:2031	Ta=85℃±5℃	1000Hrs	22	0
	低温存储 Low temperature store	JIS7021:B12	Ta= -35℃±5℃	1000Hrs	22	0
	高温高湿测试 High temperature/ humidity test	JIS7021:B11 MIL-STD-202:103D	Ta=85℃±5℃ RH=85%	1000Hrs	22	0
	冷热冲击测试 Cold / Heat strike test	JIS7021:B4 MIL-STD-202:107D MIL-STD-750:1026	30min -10℃±5℃←→100℃±5℃ 5min 5min	50Cycles	22	0
	冷热循环测试 Cold and heat cycle test	JIS7021:A3 MIL-STD-202:107D MIL-STD-705:105E	5min 5min 5min -35℃～25℃～85℃～-35℃ 30min 5min 30min 5min	50Cycles	22	0

八、失效判定标准 Criteria For Judging Damage

Test Items 项目	Symbol 符号	Test Condition 测试条件	Judging For Damage 判定标准	
			Min. 最小	Max. 最大
Forward Voltage 正向电压	VF	IF=5mA	--	U.L*x1.1
Reverse Current 反向电流	IR	VR = 5V	--	U.L*x2.0
Luminous Intensity 光强	Mcd	IF=5mA	L.L*x0.7	--

U.L: Upper standard level 规格Max
L.L: Lower standard level 规格Min

Copyright © 2024, TONYU All Rights Reserved.

九、注意事项 Note

1、焊接 Welding

（1）SMD LED 灌封胶较软，外力易损坏发光面及塑料壳，焊接时要轻拿轻放。

SMD LED is soft and easy to damage the luminous surface and plastic shell by external force It should be handled lightly when welding.

（2）建议使用易洗型的助焊剂，依照回流曲线条件回流焊接，回流次数最多两次，确保 LED 发光面干净，异物会影响发光颜色。

It is recommended to use soldering flux with tin wash type, reflow soldering according to the condition of reflux curve, reflow twice at most, ensure the LED luminous surface is clean, foreign matter will affect the luminous color.

（3）**使用手工烙铁焊接**，推荐使用功率低于 20W 的烙铁，焊接时烙铁的温度必须保持在 360℃以下，且每个电极只能进行一次焊接，每次焊接的持续时间不得超过 3 秒。

人手焊接过程中的不慎操作易引起 LED 产品的损坏，应当小心谨慎。

A soldering iron of less than 20W is recommended to be used in Hand Soldering. Please keep the temperature of the soldering iron under 360℃ while soldering. Each terminal of the LED is to go for less than 3 second and for one time only.

Be careful because the damage of the product is often started at the time of the hand soldering.

（4）**回流焊接：**推荐使用以下无铅回流焊接温度图进行。

Reflow Soldering: Use the conditions shown in the under Figure of Pb-Free Reflow Soldering

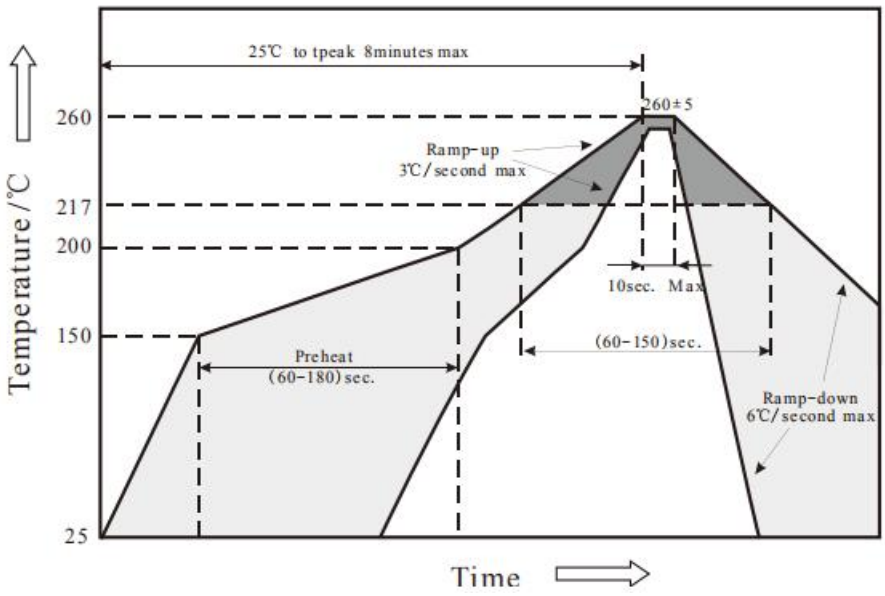

（5）回流焊不能超过两次,回流焊最高温度建议 260℃。

Reflow soldering should not be done more than two times.The reflow temperature we recommend is 260℃

（6）焊接过程中，严禁在高温情况下碰触胶体；焊接后禁止对胶体施加外力，禁止弯折 PCB，避免元件受到撞击。

During the soldering process, do not touch the lens at high temperature，After soldering, any mechanical force on the lens or any excessive vibration shall not be accepted to apply, also the circuit board shall not be bent as well.

（7）在焊接完成后，待产品温度下降到室温之后，再进行其他处理。

After soldering, do not deal with the product before its temperature drop down to room temperature

Copyright © 2024, TONYU All Rights Reserved.

（8）请不要将不同 BIN 级的 LED 使用于同一个产品上，否则可能会导致产品的严重色差。

Please do not use different BIN LED on the same product, otherwise it may cause serious color difference.

2、防静电措施 ESD countermeasure

（1）静电和电涌会导致产品特性发生改变，例如正向电压降低等，如果情况严重甚至会损毁产品。所以在使用时必须采取有效的防静电措施。

Static electricity or surge voltage damages the LEDs. Damaged LEDs will show some unusual characteristics such as the forward voltage becomes lower, or the LEDs can not be lighted up. In view of the above, we should do some anti-static precautions when using the SMD LED

（2）所有相关的设备和机器都应该正确接地，同时必须采取其他防止静电和电涌的措施。

All devices, equipments and machineries must be properly grounded, at the same time we should take measures to prevent anti-static and voltage surge.

（3）使用防静电手环，防静电垫子，防静电工作服、工作鞋、手套，防静电容器，都是有效的防止静电和电涌的措施。

It is also recommended that anti-electrostatic wrist bands, pads, uniforms, gloves or containers can be used when dealing with the LEDs

3、反压保护 Reverse voltage protection

通常 LED 的反向漏电流都很小，不会影响正常使用。如果 LED 长期遭受超过其所能承受的反向电压冲击时，LED 会被损伤， 例如，反向漏电流会迅速变大等。这样会引起显示屏零灰度下串光的发生。在设计中，要注意控制反向电压，建议加在 LED 上的反向电压值不超过 10V。

In general, the reverse current of LED is very small, which won't affect the normal use of components. But when it is often suffered the reverse voltage which exceeds the limit of the component then it will be damaged. Such as the reverse current increase rapidly. And it will cause the string light when the screen is black. So please pay attention to controlling the reverse voltage which less than 10V is recommended.

4、清洗 Cleaning

在焊接后推荐使用酒精（无水乙醇）进行清洗，在温度不高于 30℃的条件下持续 3 分钟，不高于 50℃的条件下持续 30 秒。使用其他类似溶剂清洗前，请先确认使用的溶剂不会对 LED 的封装和环氧树脂部分造成损伤。

It is recommended that alcohol（Anhydrous ethanol）be used as a solvent for cleaning after soldering. Cleaning is to go under 30℃ for 3 minutes or 50℃ for 30 seconds. When using other solvents, it should be confirmed beforehand whether the solvents will dissolve the package and the resin or not.

5、灌封 Enbedment

（1）挥发性物质会渗透到 LED 内部，在通电产生光子及热的条件下，会导致 LED 变色，进而造成严重光衰，严禁使用任何对 LED 器件的性能或者可靠性有害的物质或材料，针对特定的用途和使用环境，建议对所有的物质和材料进行相容性的测试。在贴装 LED 时候，不要使用能产生有机挥发性气体的粘结剂。

Volatile substances to leach into the LED inside, photons in electricity and heat conditions, will lead to the LED color, thus causing serious droop, it is forbidden to use any of the LED device performance or reliability of harmful substances or materials, for a specific purpose and use of the environment, advice on all the material and the material compatibility test.When attaching LED, do not use adhesive that can produce volatile organic gas.

Copyright © 2024, TONYU All Rights Reserved.

（2）使用正常灌封胶时,建议先以少量试验，常温点亮 168 小时，确定没有问题再作业。

It is recommended to light up for 168 hours at room temperature for a small amount of test before using normal filling and sealing glue.

6、存储时间 Storage time

（1）在温度 5℃～35℃，湿度 RH60%条件下，产品可保存一年。超过保存期的产品需重新检测后方能使用。

LED can be stored for a year under the condition: the temperature of 5℃～35℃ and humidity of RH60%， These production must be re-inspected and tested before use if their storage time exceed a year.

（2）如果打开的产品在 5℃～35℃，RH60%的空气条件下放置超过一周，则需要将产品在 65℃±5℃的环境中放置 24 小时以上，并尽量在十五天内使用。

If LED is exposed in air for a week under the condition: the temperature of 5℃～35℃，humidity of RH60%，must place the LED in the ambience of 65℃±5℃ for 24 hours and use it in 15 days for best.

7、使用注意事项 Precautions

（1）直接用手拿取产品不但会污染封装树脂表面，也可能由于静电等因素导致产品性能的改变。过度的压力也可能直接影响封装内部的管芯和金线，因此请勿对产品施加过度压力，特别当产品处于高温状态下，例如在回流焊接过程中。

When handling the product, touching the encapsulation with bare hands will not only contaminate its surface,but also have an effect on its optical characteristics. Excessive force to the encapsulation might result in catastrophic failure of the LEDs due to die breakage or wire deformation. For this reason, please do not put excessive stress on LEDs, especially when the LEDs are heated such as during Reflow Soldering.

（3）产品在进行 PCB 布线设计时，针对软性板材、及 0.5T 以下板材，焊盘走向应与 PCB 延展方向保持垂直状态，以减少 PCB 板弯折时产生之应力作用在 LED 引脚，造成 LED 产品因应力作用拉伸产生失效隐患；

In PCB wiring design, for soft plates and plates below 0.5T, the direction of the pads should be kept perpendicular to the direction of PCB extension, so as to reduce the effect of the bending stress of the PCB on the LED pins, resulting in the potential failure of LEDS products due to stress stretching

（4）LED 的环氧树脂封装部分相当脆弱，请勿用坚硬、尖锐的物体刮、擦封装树脂部分。在用镊子夹取的时候也应当小心注意。

The epoxy resin of encapsulation is fragile, so please avoid scratch or friction over the epoxy resin surface.While handling the product with tweezers, do not hold by the epoxy resin, be careful.



OK 正确的拿取方式　　NG 错误的拿取方式

8、其他 Others

（1）依规格要求，本公司保留调整产品材料组合的权利。

TONYU reserves the rights on the adjustment of product material mix for the specification.

（2）如果超出规格书以外而进行使用时，出任何问题我们都将不承担责任 。

We will not be responsible for any problem if it is used beyond the specification.

（3）在使用产品之前，应与我们交流，了解更详细的规格要求。

Before using the product, you should communicate with us for more detailed specifications.

Copyright © 2024, TONYU All Rights Reserved.