ROHS Compliant

MAPX	MODIFICATION	DATE	DRAW	APPROVE

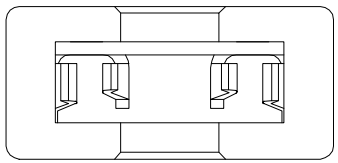

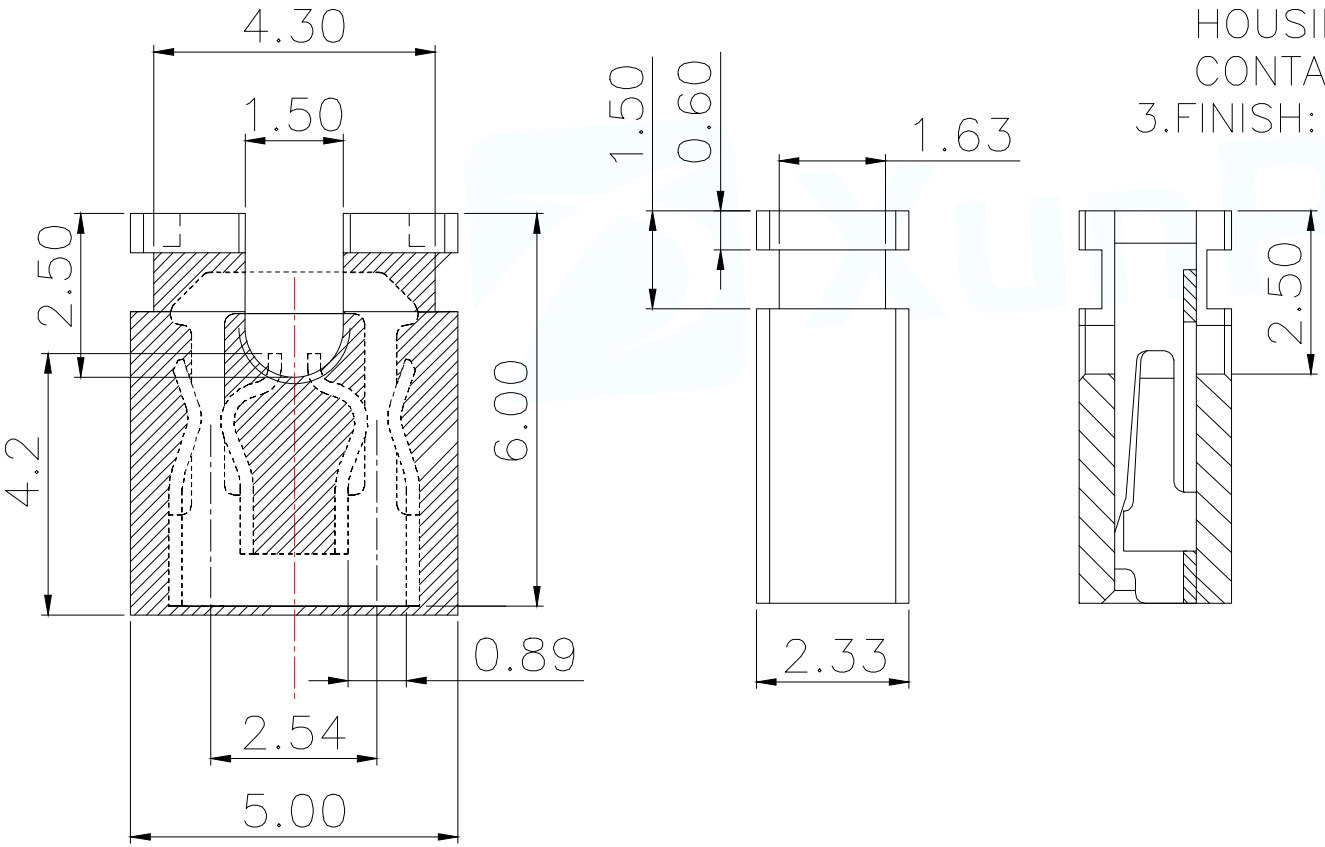

NOTE

1.SPECIFICATIONS

WITHSTANDING VOLTAGE: 500V AC

CURRENT RATING: 2AMP

INSULATION RESISTANCE: 1000MΩ MIN

CONTACT RESISTANCE: 20 mΩ MAX

TEMPERATURE RANGE: −55°C ~ +85°C

2.MATERIAL

HOUSING: THERMOPLASTIC UL94V−0

CONTACT: BRASS

3.FINISH: SEE TABLE

Table:

PART NAME	Q'TY	Material
CONTACT	1	C2680R−H,NI 80U"
HOUSING	1	PBT+30%GF,BLACK
CONTACT	1	C2680R−H,GOLD FLASH
CONTACT	1	C2680R−H,GOLD 15U"
CONTACT	1	C2680R−H,GOLD 30U"
CONTACT	1	C2680R−H,半金镍0.4U"

MANUFACTURE DWG	东莞市讯普电子科技有限公司 DongGuan XunPu Electronics Co,Ltd				
UNLESS OTHERWISE SPECIFED TOLERANCES		TITLE: 2.54mm 开口短路帽			
		PAR	F254D−02KK−B		
DECIMALS:	ANGLES:	DWN	Lucas		
.X:±0.30	±1°	CHKD	Ethan		
.XX:±0.20		APVD	Jacob		
.XXX:±0.10	CUSTOMER COPY	SCALE1:1	UNIT:MM		
		SIZE:A4	SHEET:1F1	REV:A	