74AHC1G126 Series

SINGLE BUFFER GATE WITH 3-STATE OUTPUT

Description

The 74AHC1G126 is a single non-inverting buffer/bus driver with a 3-state output. The output enters a high impedance state when a LOW-level is applied to the output enable (OE) pin. The device is designed for operation with a power supply range of 2.0V to 5.5V.

Applications

- General Purpose Logic
- Wide array of products such as:
  - PCs, networking, notebooks, netbooks, PDAs
  - Computer peripherals, hard drives, CD/DVD ROM
  - TV, DVD, DVR, set top box
  - Personal Navigation / GPS
  - MP3 players ,Cameras, Video Recorders

Features

- Supply Voltage Range from 2.0V to 5.5V
- ± 8 mA Output Drive at 5.0V
- CMOS low power consumption
- Schmitt Trigger Action at All Inputs Make the Circuit Tolerant for Slower Input Rise and Fall Time
- ESD Protection per JESD 22
  - Exceeds 200-V Machine Model (A115-A)
  - Exceeds 2000-V Human Body Model (A114-A)
  - Exceeds 1000-V Charged Device Model (C101C)
- Latch-Up Exceeds 100mA per JESD 78, Class II
- SOT23-5 and SOT353: Assembled with “Green” Molding Compound (no Br, Sb)
- Lead Free Finish / RoHS Compliant (Note 1)

Logic Diagram

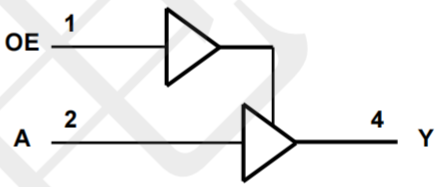

Ordering Information

ORDER NUMBER	PACKAGE DESCRIPTION	PACKAGE OPTION
74AHC1G126SE-TP	SOT353	Tape and Reel,3000
74AHC1G126W5-TP	SOT23-5	Tape and Reel,3000

Pin Configuratio

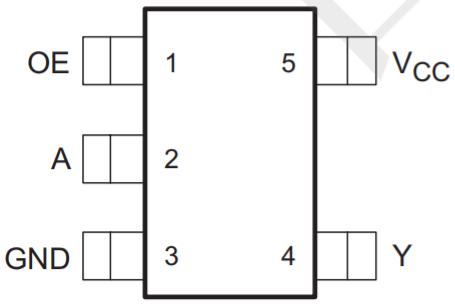

SOT353/SOT23-5

Function Table

Inputs		Output
OE	A	Y
H	H	H
H	L	L
L	X	Z

Absolute Maximum Ratings (Note 2)

Symbol	Description	Rating	Unit
ESD HBM	Human Body Model ESD Protection	2	KV
ESD CDM	Charged Device Model ESD Protection	1	KV
ESD MM	Machine Model ESD Protection	200	V
V_{CC}	Supply Voltage Range	-0.5 to 6.5	V
V_I	Input Voltage Range	-0.5 to 6.5	V
V_O	Voltage applied to output in high or low state	-0.5 to V_{CC} +0.5	V
I_{IK}	Input Clamp Current V_I<0	-20	mA
I_{OK}	Output Clamp Current (V_O < 0 or V_O > V_{CC})	±20	mA
I_O	Continuous output current (V_O = 0 to V_{CC})	±25	mA
I_{CC}	Continuous current through V_{CC}	50	mA
I_{GND}	Continuous current through GND	-50	mA
T_J	Operating Junction Temperature	-40 to 150	°C
T_{STG}	Storage Temperature	-65 to 150	°C

Notes: 2. Stresses beyond the absolute maximum may result in immediate failure or reduced reliability. These are stress values and device operation should be within recommend values.

Recommended Operating Conditions (Note 3)

Symbol	Parameter		Min	Max	Unit
V_{CC}	Operating Voltage		2	5.5	V
V_{IH}	High-level Input Voltage	V_{CC} = 2V	1.5		V
		V_{CC} = 3V	2.1		
		V_{CC} = 5.5V	3.85		
V_{IL}	Low-level input voltage	V_{CC} = 2V		0.5	V
		V_{CC} = 3V		0.9	
		V_{CC} = 5.5V		1.65	
V_I	Input Voltage		0	5.5	V
V_O	Output Voltage		0	V_{CC}	V
I_{OH}	High-level output current	V_{CC} = 2V		-50	uA
		V_{CC} = 3.3V ± 0.3V		-4	mA
		V_{CC} = 5V ± 0.5V		-8	
I_{OL}	Low-level output current	V_{CC} = 2V		50	uA
		V_{CC} = 5V ± 0.5V		4	mA
		V_{CC} = 3V		8	
Δt/ΔV	Input transition rise or fall rate	V_{CC} = 3.3V ± 0.3V		100	ns/V
		V_{CC} = 5V ± 0.5V		20	
T_A	Operating free-air temperature		-40	125	ºC

Notes: 3. Unused inputs should be held at V_{CC} or Ground.

Electrical Characteristics

Symbol	Parameter	Test Conditions	V_{CC}	25°C			-40°C to 85°C		-40°C to 125°C		Unit
				Min	Typ.	Max	Min	Max	Min	Max	
V_{OH}	High Level Output Voltage	I_{OH} = -50μA	2V	1.9	2		1.9		1.9		V
			3V	2.9	3		2.9		2.9		
			4.5V	4.4	4.5		4.4		4.4		
		I_{OH} = -4mA	3V	2.58			2.48		2.40		
		I_{OH} = -8mA	4.5V	3.94			3.8		3.70		
V_{OL}	Low Level Output Voltage	I_{OL} = 50μA	2V			0.1		0.1		0.1	V
			3V			0.1		0.1		0.1	
			4.5V			0.1		0.1		0.1	
		I_{OL} = 4mA	3V			0.36		0.44		0.55	
		I_{OL} = 8mA	4.5V			0.36		0.44		0.55	
I_I	Input Current	V_I = 5.5 V or GND	0 to 5.5V			± 0.1		± 1		± 2	μA
I_{OZ}	Z State Leakage Current	V_O =0 to 5.5 V	5.5V			0.25		2.5		10	μA
I_{CC}	Supply Current	V_I = 5.5V or GND I_O=0	5.5V			1		10		40	μA
C_I	Input Capacitance	V_I = V_{CC} – or GND	5.5V		2.0	10		10		10	pF
θ_{JA}	Thermal Resistance Junction-to-Ambient	SOT23-5	(Note 4)		195						°C/W
		SOT353			430						
θ_{JC}	Thermal Resistance Junction-to-Case	SOT23-5	(Note 4)		58						°C/W
		SOT353			155						

Note: 4. Test conditions for SOT25, and SOT353: Device mounted on FR-4 substrate PC board, 2oz copper, with minimum recommended pad layout

Switching Characteristics

V_{CC} = 3.3V ± 0.3 (see Figure 1)

Parameter	From (Input)	TO (OUTPUT)		25°C			-40°C to 85°C		-40°C to 125°C		Unit
				Min	Typ.	Max	Min	Max	Min	Max	
t_{pd}	A	Y	C_L=15pF	0.6	4.4	8.0	0.6	9.5	0.6	10.0	ns
			C_L=50pF	0.6	6.3	11.5	0.6	13.0	0.6	14.5	ns
t_{en}	OE	Y	C_L=15pF	0.6	4.9	8.0	0.6	9.5	0.6	10.0	ns
			C_L=50pF	0.6	7.0	11.5	0.6	13.0	0.6	14.5	ns
t_{dis}	OE	Y	C_L=15pF	0.6	6.3	9.7	0.6	11.5	0.6	12.5	ns
			C_L=50pF	0.6	9.0	13.2	0.6	15.0	0.6	16.5	ns

V_{CC} = 5V ± 0.5V (see Figure 1)

Parameter	From (Input)	TO (OUTPUT)		25°C			-40 °C to 85 °C		-40 °C to 125 °C		Unit
				Min	Typ.	Max	Min	Max	Min	Max	
t_{pd}	A	Y	C_L=15pF	0.6	3.4	5.5	0.6	6.5	0.6	7.0	ns
			C_L=50pF	0.6	4.7	7.5	0.6	8.5	0.6	9.5	ns
t_{en}	OE	Y	C_L=15pF	0.6	3.6	5.6	0.6	6.3	0.6	7.0	ns
			C_L=50pF	0.6	5.4	8.0	0.6	9.0	0.6	9.5	ns
t_{dis}	OE	Y	C_L=15pF	0.6	4.3	6.8	0.6	8.0	0.6	8.5	ns
			C_L=50pF	0.6	6.1	8.8	0.6	10.0	0.6	11.0	ns

Operating Characteristics

T_A = 25 °C

Parameter		Test Conditions	V_{CC} = 5 V	Unit
			Typ.	
C_{pd}	Power dissipation capacitance	f = 1 MHz No Load	12	pF

Parameter Measurement Information

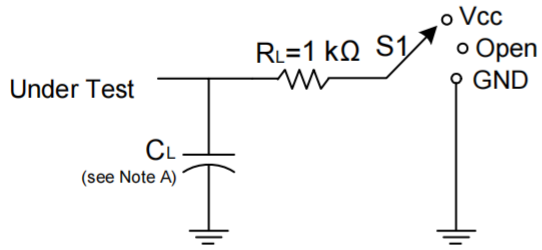

TEST	S1
t_{PLH}/t_{PHL}	Open
t_{PLZ}/t_{PZL}	Vload
t_{PHZ}/t_{PZH}	GND

V_{CC}	Inputs		V_M	C_L	$V\Delta$
	V_I	t_r/t_f			
3.3V±0.3V	V_{CC}	≤3ns	$V_{CC}/2$	15pF	0.3V
5V±0.5V	V_{CC}	≤3ns	$V_{CC}/2$	15pF	0.3V
3.3V±0.3V	V_{CC}	≤3ns	$V_{CC}/2$	50pF	0.3V
5V±0.5V	V_{CC}	≤3ns	$V_{CC}/2$	50pF	0.3V

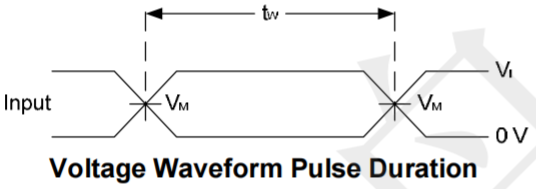

Voltage Waveform Pulse Duration

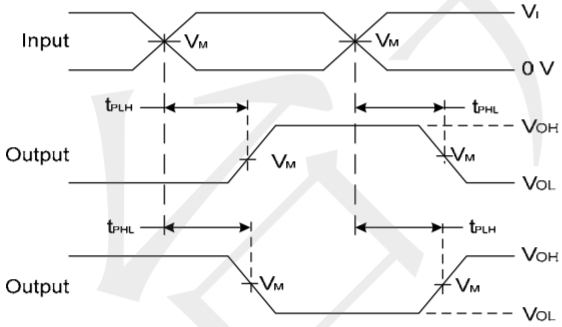

Voltage Waveform Propagation Delay Times
Inverting and Non Inverting Outputs

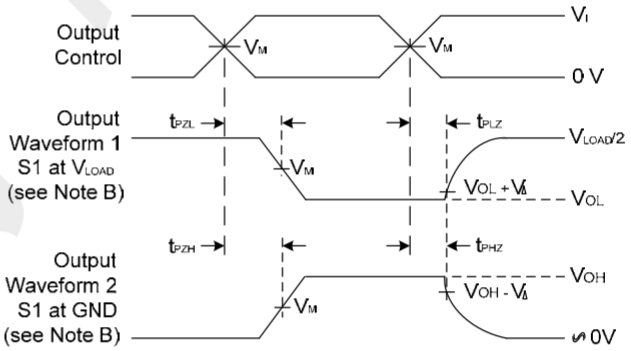

Voltage Waveform Enable and Disable Times
Low and High Level Enabling

Load Circuit and Voltage Waveforms

Notes: A. Includes test lead and test apparatus capacitance.
B. All pulses are supplied at pulse repetition rate ≤ 1 MHz.
C. Inputs are measured separately one transition per measurement.
D. t_{PLZ} and t_{PHZ} are the same as t_{dis}.
E. t_{PZL} and t_{PZH} are the same as t_{EN}.
F. t_{PLH} and t_{PHL} are the same as t_{PD}.

Package Outline Dimensions (unit:mm)

SOT-353

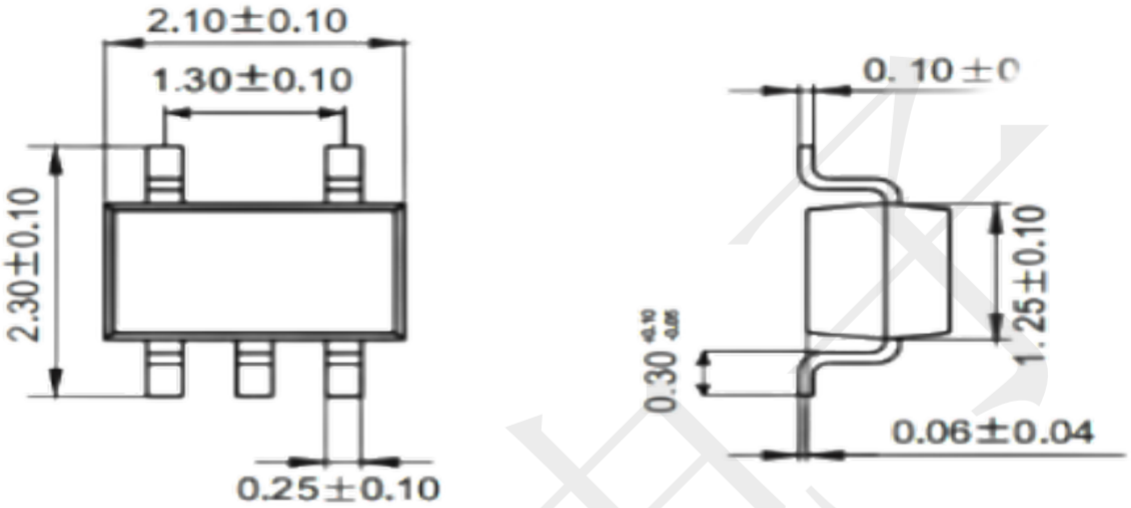

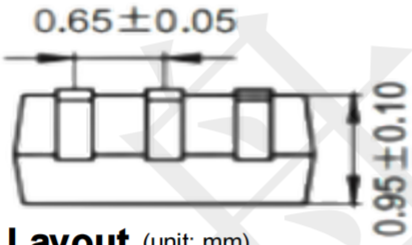

Mounting Pad Layout (unit: mm)

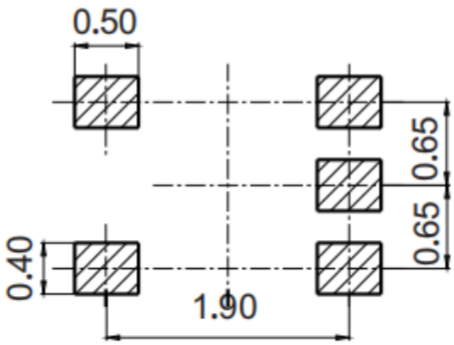

Package Outline Dimensions (unit:mm)

SOT23-5

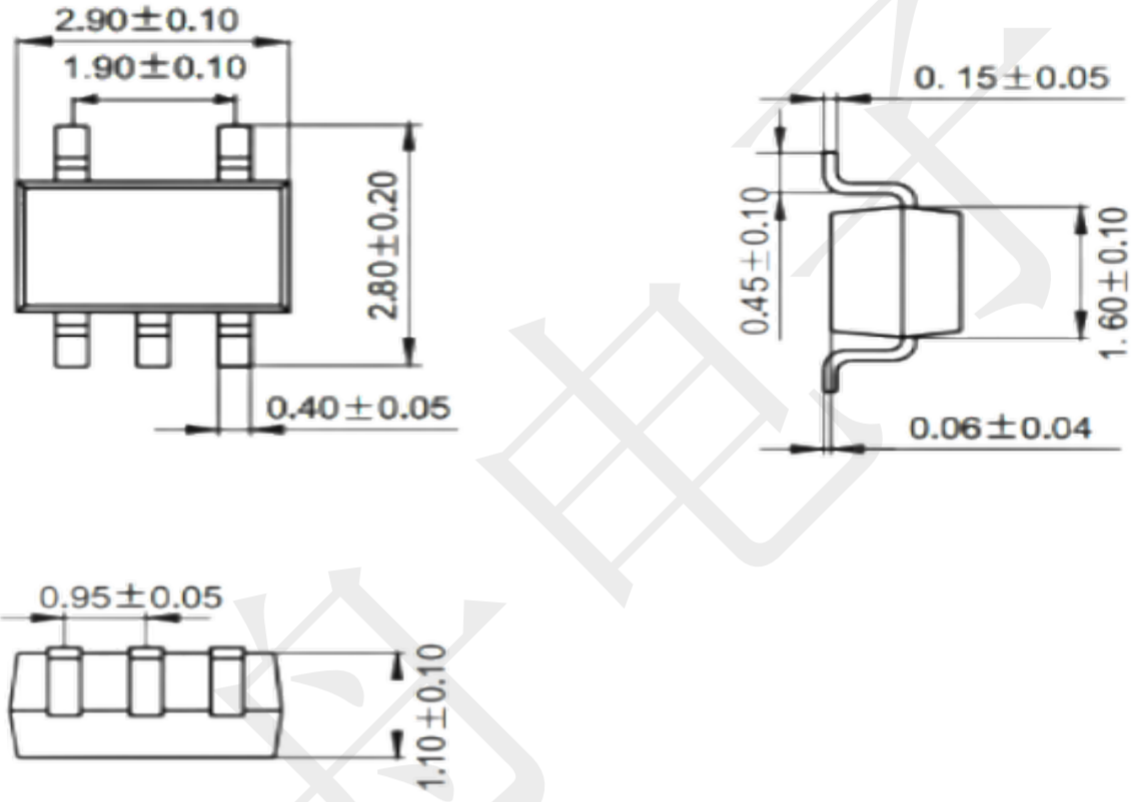

Mounting Pad Layout (unit: mm)

