TECH PUBLIC
台舟电子

74LVC1G32 Series

SINGLE 2-INPUT POSITIVE-OR GATE

WWW.TECHPUBLIC.COM

Features

- Operation Voltage Range: 1.6V ~ 5.5V
- Low power current: I_{CC}=10μA(Max)
- ±24mA output drive (V_{CC}=3.0V)
- Power down protection
- ESD Protection Exceeds JESD 22
  - 2000-V Human-Body Model (A114-A)
  - 1000-V Charged-Device Model (C101)
- SOT23-5 Package Available
- SOT353 Package Available

Applications

- Voltage Level Shifting
- General Purpose Logic
- Power Down Signal Isolation
- Wide array of products such as:
  - PCs, Networking, Notebooks, Netbooks, PDAs
  - Tablet Computers, E-readers
  - Computer Peripherals, Hard Drives, CD/DVD ROM
  - TV, DVD, DVR, Set-Top Box
  - Cell Phones, Personal Navigation / GPS
  - MP3 Players, Cameras, Video Recorders

General Description

The 74LVC1G32 is a single 2-input OR gate which provides the Function Y=A+B in positive logic circuit.

This device has power-down protective circuit to prevent the device from destruction when it is powered down.

Ordering Information

ORDER NUMBER	PACKAGE DESCRIPTION	PACKAGE OPTION
74LVC1G32W5-TP	SOT23-5	Tape and Reel,3000
74LVC1G32SE-TP	SOT353	Tape and Reel,3000

Logic Diagram



Logic symbol

Pin Configuration

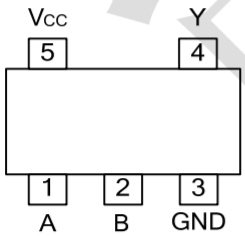

SOT23-5
SOT353

Function Table

INPUT(A)	INPUT(B)	OUTPUT(Y)
H	X	H
X	H	H
L	L	L

Note: H: HIGH voltage level; L: LOW voltage level; X: Don't care.

Absolute Maximum Ratings

PARAMETER	SYMBOL	TEST CONDITIONS	RATINGS	UNIT
Supply Voltage	V_{CC}		-0.5 ~ +6.5	V
Input Voltage	V_{IN}		-0.5 ~ +6.5	V
Output Voltage	V_{OUT}	Output in the high or low state	-0.5 ~ V_{CC}+0.5	V
		Output in the high-impedance or power-off state	-0.5 ~ +6.5	V
V_{CC} or GND Current	I_{CC}		±100	mA
Continuous Output Current	I_{OUT}	V_{OUT}=0 ~ V_{CC}	±50	mA
Input Clamp Current	I_{IK}	V_{IN}<0	-50	mA
Output Clamp Current	I_{OK}	V_{OUT}<0	-50	mA
Operating Temperature	T_{OPR}		-40 ~ + 125	°C
Storage Temperature	T_{STG}		-65 ~ +150	°C

Note: Absolute maximum ratings are those values beyond which the device could be permanently damaged. Absolute maximum ratings are stress ratings only and functional device operation is not implied.

Recommended Operating Conditions

PARAMETER	SYMBOL	CONDITIONS	MIN	TYP	MAX	UNIT
Supply Voltage	V_{CC}	Operating	1.65		5.5	V
		Data retention only	1.5			V
Input Voltage	V_{IN}		0		5.5	V
Output Voltage	V_{OUT}	High or low state	0		V_{CC}	V
Input Transition Rise or Fall Rate	Δt/Δv	V_{CC}=1.8V±0.15V V_{CC}=2.5V±0.2V			20	ns/V
		V_{CC}=3.3V±0.3V			10	ns/V
		V_{CC}=5V±0.5V			5	ns/V
Operating Temperature	T_A		-40		+125	°C

Thermal Data

PARAMETER		SYMBOL	RATINGS	UNIT
Junction to Case	SOT23-5	θ_{JC}	280	°C/W
	SOT353		350	

Electrical Characteristics

PARAMETER	SYMBOL	TEST CONDITIONS	T_A=25°C			T_A=-40°C~+125°C			UNIT
			MIN	TYP	MAX	MIN	TYP	MAX	
High-Level Input Voltage	V_{IH}	V_{CC}=1.65V ~ 1.95V	0.65×V_{CC}			0.65×V_{CC}			V
		V_{CC}=2.3V ~ 2.7V	1.7			1.7			V
		V_{CC}=3V ~ 3.6V	2			2			V
		V_{CC}=4.5V ~ 5.5V	0.7×V_{CC}			0.7×V_{CC}			V
Low-Level Input Voltage	V_{IL}	V_{CC}=1.65V ~ 1.95V			0.35×V_{CC}			0.35×V_{CC}	V
		V_{CC}=2.3V ~ 2.7V			0.7			0.7	V
		V_{CC}=3V ~ 3.6V			0.8			0.8	V
		V_{CC}=4.5V ~ 5.5V			0.3×V_{CC}			0.3×V_{CC}	V
High-Level Output Voltage	V_{OH}	V_{CC}=1.65 ~ 5.5V, I_{OH}=-100μA	V_{CC}-0.1			V_{CC}-0.1			V
		V_{CC}=1.65V, I_{OH}=-4mA	1.2			0.95			V
		V_{CC}=2.3V, I_{OH}=-8mA	1.9			1.7			V
		V_{CC}=3.0V, I_{OH}=-16mA	2.4			2.1			V
		V_{CC}=3.0V, I_{OH}=-24mA	2.3			2.0			V
		V_{CC}=4.5V, I_{OH}=-32mA	3.8			3.4			V
Low-Level Output Voltage	V_{OL}	V_{CC}=1.65 ~ 5.5V, I_{OL}=100μA			0.1			0.1	V
		V_{CC}=1.65V, I_{OL}=4mA			0.45			0.7	V
		V_{CC}=2.3V, I_{OL}=8mA			0.3			0.45	V
		V_{CC}=3.0V, I_{OL}=16mA			0.4			0.5	V
		V_{CC}=3.0V, I_{OL}=24mA			0.55			0.8	V
		V_{CC}=4.5V, I_{OL}=32mA			0.55			0.8	V
Input Leakage Current	$I_{I(LEAK)}$	V_{CC}=0 ~ 5.5V, V_{IN}=5.5V or GND			±5			±5	μA
Power OFF Leakage Current	I_{OFF}	V_{CC}=0V, V_{IN} or V_{OUT}=5.5V			±10			±25	μA
Quiescent Supply Current	I_Q	V_{CC}=1.65 ~ 5.5V, V_{IN}=5.5V or GND, I_{OUT}=0			10			10	μA
Additional Quiescent Supply Current Per Input Pin	ΔI_Q	V_{CC}=3 ~ 5.5V, One input at V_{CC}-0.6V, Other inputs at V_{CC} or GND			500			500	μA

Dynamic Characteristics

(Input: t_R, t_F≤3ns; P_{RR}≤1MHz)

PARAMETER	SYMBOL	TEST CONDITIONS		T_A=25°C			T_A=-40°C~+125°C			UNIT
				MIN	TYP	MAX	MIN	TYP	MAX	
Propagation Delay From Input (A) to Output (Y)	t_{PLH} / t_{PHL}	C_L=15pF, R_L=1MΩ	V_{CC}=1.8±0.15V	1.9		9			12	ns
			V_{CC}=2.5±0.2V	0.8		6.5			9	ns
			V_{CC}=3.3±0.3V	0.9		5.5			8	ns
			V_{CC}=5±0.5V	0.8		5			7	ns
		C_L=30pF, R_L=1KΩ	V_{CC}=1.8±0.15V	2.8		9.5			12.5	ns
		C_L=30pF, R_L=500Ω	V_{CC}=2.5±0.2V	1.2		7.5			10	ns
		C_L=50pF, R_L=500Ω	V_{CC}=3.3±0.3V	1.1		6.5			9	ns
			V_{CC}=5±0.5V	1		6			8	ns

Operating Characteristics

PARAMETER	SYMBOL	TEST CONDITIONS	MIN	TYP	MAX	UNIT
Input Capacitance	C_{IN}	V_{CC}=3.3V, V_{IN}=V_{CC} or GND		4		pF
Power Dissipation Capacitance	C_{PD}	V_{CC}=1.8V		20		pF
		V_{CC}=2.5V		20		pF
		V_{CC}=3.3V		21		pF
		V_{CC}=5V		22		pF

Test Circuit And Waveforms

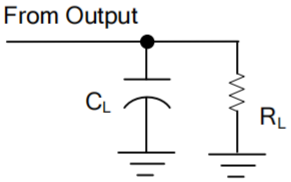

TEST CIRCUIT

V_{CC}	INPUTS		V_M	C_L	R_L
	V_{IN}	t_R, t_F			
1.8V±0.15V	V_{CC}	≤2ns	V_{CC}/2	15pF	1MΩ
2.5V±0.2V	V_{CC}	≤2ns	V_{CC}/2	15pF	1MΩ
3.3V±0.3V	3V	≤2.5ns	1.5V	15pF	1MΩ
5V±0.5V	V_{CC}	≤2.5ns	V_{CC}/2	15pF	1MΩ
1.8V±0.15V	V_{CC}	≤2ns	V_{CC}/2	30pF	1KΩ
2.5V±0.2V	V_{CC}	≤2ns	V_{CC}/2	30pF	500Ω
3.3V±0.3V	3V	≤2.5ns	1.5V	50pF	500Ω
5V±0.5V	V_{CC}	≤2.5ns	V_{CC}/2	50pF	500Ω

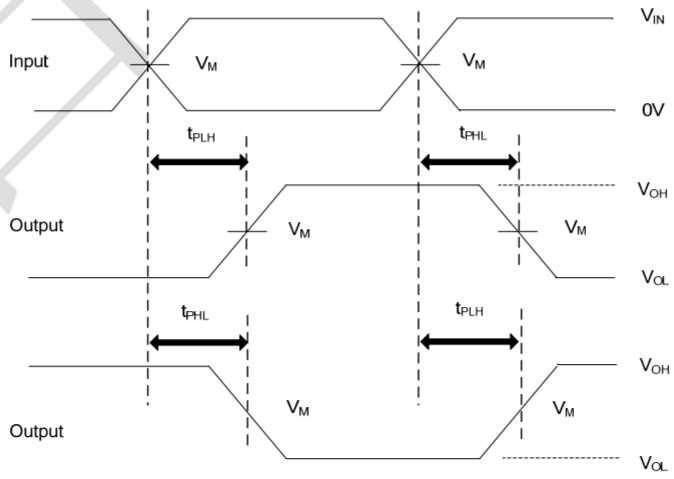

PROPAGATION DELAY TIMES

Package Outline Dimensions (Unit: mm)

SOT23-5

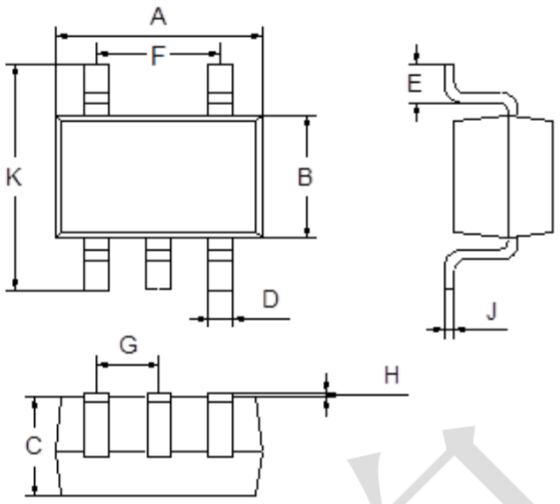

Dimension	Min.	Max.
A	2.80	3.00
B	1.50	1.70
C	1.00	1.20
D	0.35	0.45
E	0.35	0.55
F	1.80	2.00
G	0.90	1.00
H	0.02	0.10
J	0.10	0.20
K	2.60	3.00

Mounting Pad Layout (Unit: mm)

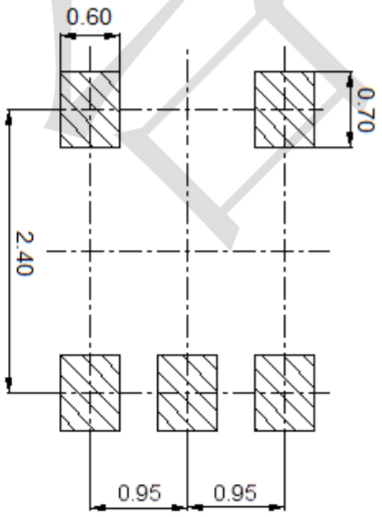

Package Outline Dimensions (Unit: mm)

SOT353

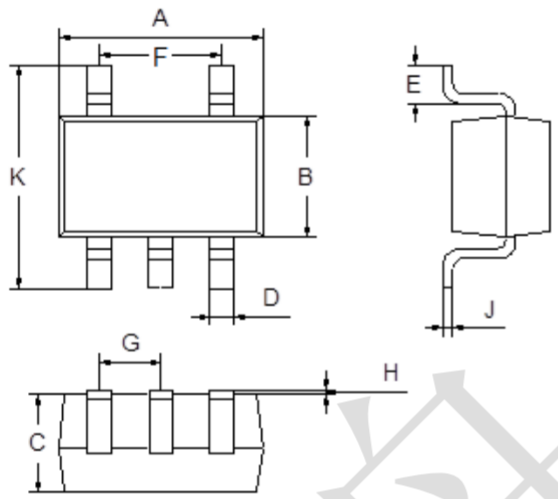

Dimension	Min.	Max.
A	2.00	2.20
B	1.15	1.35
C	0.85	1.05
D	0.15	0.35
E	0.25	0.40
F	1.20	1.40
G	0.60	0.70
H	0.02	0.10
J	0.05	0.15
K	2.20	2.40

Mounting Pad Layout (Unit: mm)

