74LVC1G06 Series

SINGLE INVERTER WITH OPEN-DRAIN OUTPUT

Features

- Operate from 1.65V to 5.5V
- Input and Open-Drain Output Accept Voltages to 5.5V
- Max tPD of 4 ns at 3.3V
- ESD Protection Exceeds JESD 22
  -2000-V Human-Body Model (A114-A)
  -200-V Machine Model (A115-A)
  -1000-V Charged-Device Model (C101)

Applications

- AV Receiver
- Audio Dock:Portable
- Blu-ray Player and Home Theater
- Embedded PC
- Personal Digital Assistant(PDA)
- Power:Telecom/Server AC/DC Supply:Single Controller:Analog and Digital
- Solid State Drive(SSD):Client and Enterprise
- Wireless Headset,Keyboard,and Mouse

General Description

The 74LVC1G06 is a single inverter and its output is an open drain. This device provides the Function $Y = \overline{A}$ in positive logic.

Logic Diagram



Logic Symbol

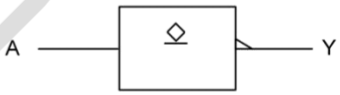

IEC Logic Symbol

Ordering Information

ORDER NUMBER	PACKAGE DESCRIPTION	PACKAGE OPTION
74LVC1G06W5-TP	SOT23-5	Tape and Reel,3000
74LVC1G06SE-TP	SOT353	Tape and Reel,3000

Pin Configuratio

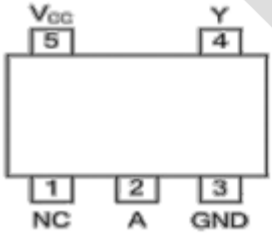

SOT23-5
SOT353

Function Table

INPUT(A)	OUTPUT(Y)
H	L
L	Z

Note: H: High Voltage Level
L: Low Voltage Level
Z: High-Impedance OFF-State

Absolute Maximum Ratings

PARAMETER	SYMBOL	CONDITIONS	RATINGS	UNIT
Supply Voltage	V_{CC}		-0.5 ~ +6.5	**V**
Input Voltage	V_{IN}		-0.5 ~ +6.5	**V**
Output Voltage	V_{OUT}		-0.5 ~ +6.5	**V**
VCC or GND Current	I_{CC}	Output in the Power-off state	±100	**mA**
Continuous Output Current	I_{OUT}	VOUT=0~VCC	±50	**mA**
Input Clamp Current	I_{IK}	VIN<0	-50	**mA**
Output Clamp Current	I_{OK}	VOUT<0	-50	**mA**
Storage Temperature Range	T_{STG}		-65 ~ +150	℃
Junction to Ambient	θ_{JA}	SOT-23-5	230	℃/W
		SOT353	280	℃/W

Note: Absolute maximum ratings are those values beyond which the device could be permanently damaged. Absolute maximum ratings are stress ratings only and functional device operation is not implied.

Recommended Operating Conditions

PARAMETER	SYMBOL	TEST CONDITIONS	MIN	TYP	MAX	UNIT
Supply Voltage	V_{CC}	Operating	1.65	--	5.5	**V**
		Data retention only	1.5	--	--	**V**
Input Voltage	V_{IN}		0	--	5.5	**V**
Output Voltage	V_{OUT}	High or low state	0	--	VCC	**V**
Low-Level Output Current	I_{OL}	VCC=1.65V	--	--	4	**mA**
		VCC=2.3V	--	--	8	**mA**
		VCC=3V	--	--	16	**mA**
		VCC=3V	--	--	24	**mA**
		VCC=4.5V	--	--	32	**mA**
Input Transition Rise or Fall ate	Δt/Δv	VCC=1.8V±0.15V,2.5V± 0.2V	--	--	20	**ns/V**
		VCC=3.3V±0.3V	--	--	10	**ns/V**
		VCC=5V±0.5V	--	--	5	**ns/V**
Operating Temperature	T_A		-40	--	125	℃

Electrical Characteristics (unless otherwise specified)

PARAMETER	SYMBOL	TEST Conditions	TA=25°C			TA=-40°C~+125°C			UNIT
			MIN	TYP	MAX	MIN	TYP	MAX	
High-Level Input Voltage	V_{IH}	V_{CC}=1.65V ~ 1.95V	0.65×V_{CC}	--	--	0.65×V_{CC}	--	--	V
		V_{CC}=2.3V ~ 2.7V	1.7	--	--	1.7	--	--	V
		V_{CC}=3V ~ 3.6V	2	--	--	2	--	--	V
		V_{CC}=4.5V ~ 5.5V	0.7×V_{CC}	--	--	0.7×V_{CC}	--	--	V
Low-Level Input Voltage	V_{IL}	V_{CC}=1.65V ~ 1.95V	--	--	0.35×V_{CC}	--	--	0.35×V_{CC}	V
		V_{CC}=2.3V ~ 2.7V	--	--	0.7	--	--	0.7	V
		V_{CC}=3V ~ 3.6V	--	--	0.8	--	--	0.8	V
		V_{CC}=4.5V ~ 5.5V	--	--	0.35×V_{CC}	--	--	0.35×V_{CC}	V
Low-Level Output Voltage	V_{OL}	V_{CC}=1.65 ~ 5.5V, I_{OL}=100μA	--	--	0.1	--	--	0.1	V
		V_{CC}=1.65V, I_{OL}=4mA	--	--	0.45	--	--	0.7	V
		V_{CC}=2.3V, I_{OL}=8mA	--	--	0.3	--	--	0.45	V
		V_{CC}=3.0V,I_{OH}=16mA	--	--	0.4	--	--	0.6	V
		V_{CC}=3.0V,I_{OH}=24mA	--	--	0.55	--	--	0.8	V
		V_{CC}=4.5V, I_{OH}=32mA	--	--	0.55	--	--	0.8	V
Input Leakage Current	$I_{I(LEAK)}$	V_{CC}=0 ~ 5.5V, V_{IN}=5.5V or GND	--	--	±5	--	--	±5	uA
Power OFF Leakage Current	I_{OFF}	V_{CC}=0V, V_{IN} or V_{OUT}=5.5V	--	--	±10	--	--	±10	uA
Quiescent Supply Current	I_Q	V_{CC}=1.65 ~ 5.5V, V_{IN}=V_{CC} or GND, I_{OUT}=0A	--	--	10	--	--	±10	uA
Additional Quiescent Supply ent Per Input Pin	ΔI_Q	V_{CC}=3 ~ 5.5V, One input at V_{CC}-0.6V, Other inputs at V_{CC} or GND	--	--	500	--	--	500	uA

OPERATING CHARACTERISTICS (f=10MHz, TA =25°C , unless otherwise specified)

PARAMETER	SYMBOL	TEST Conditions	MIN	TYP	MAX	UNIT
Power Dissipation Capacitance	C_{PD}	V_{CC}=1.8V	--	3	--	pF
		V_{CC}=2.5V	--	3	--	pF
		V_{CC}=3.3V	--	4	--	pF
		V_{CC}=5.0V	--	6	--	pF
Input Capacitance	C_I	V_{CC}=3.3V, V_{IN}=V_{CC} or GND	--	4	--	pF
Output Capacitance	C_O	V_{CC}=3.3V, V_{OUT}=V_{CC} or GND	--	5	--	pF

SWITCHING CHARACTERISTICS (unless otherwise specified)

PARAMETER	SYMBOL	TEST Conditions		TA=25°C			TA=-40°C~+125°C			UNIT
				MIN	TYP	MAX	MIN	TYP	MAX	
Propagation delay from input (A or B) to output(Y)	t_{PLH} / t_{PHL}	C_L=30pF	V_{CC}=1.8±0.15V , R_L=1KΩ	2.2	--	6.5	1.0	--	8.5	nS
			V_{CC}=2.5±0.2V, R_L=500Ω	1.1	--	6	0.5	--	6.0	nS
		C_L=50pF R_L=500Ω	V_{CC}=3.3±0.3V	1.2	--	6	0.5	--	7.0	nS
			V_{CC}=5±0.5V	1	--	5.5	1.0	--	5.5	nS

TEST CIRCUIT AND WAVEFORMS

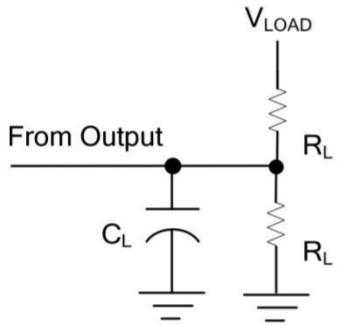

TEST CIRCUIT

V_{CC}	Inputs		V_M	V_{LOAD}	V_Δ	C_L	R_L
	V_{IN}	t_R, t_F					
1.8V±0.15V	V_{CC}	≤2ns	V_{CC}/2	2 x V_{CC}	0.15V	30pF	1KΩ
2.5V±0.2V	V_{CC}	≤2ns	V_{CC}/2	2 x V_{CC}	0.15V	30pF	500Ω
3.3V±0.3V	3V	≤2.5ns	1.5V	6V	0.3V	50pF	500Ω
5V±0.5V	V_{CC}	≤2.5ns	V_{CC}/2	2 x V_{CC}	0.3V	50pF	500Ω

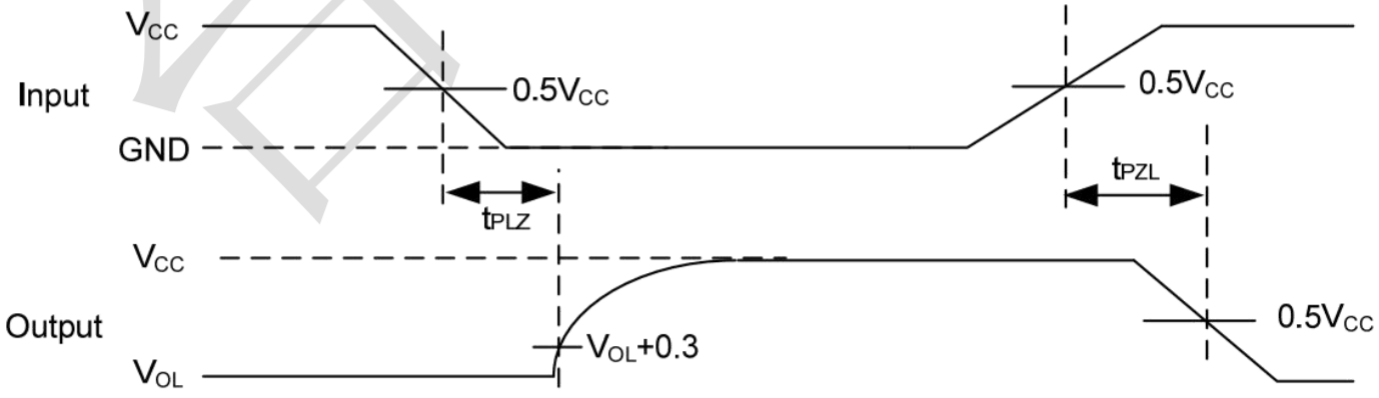

Propagation Delay Times

Package information

SOT23-5 (Unit: mm)

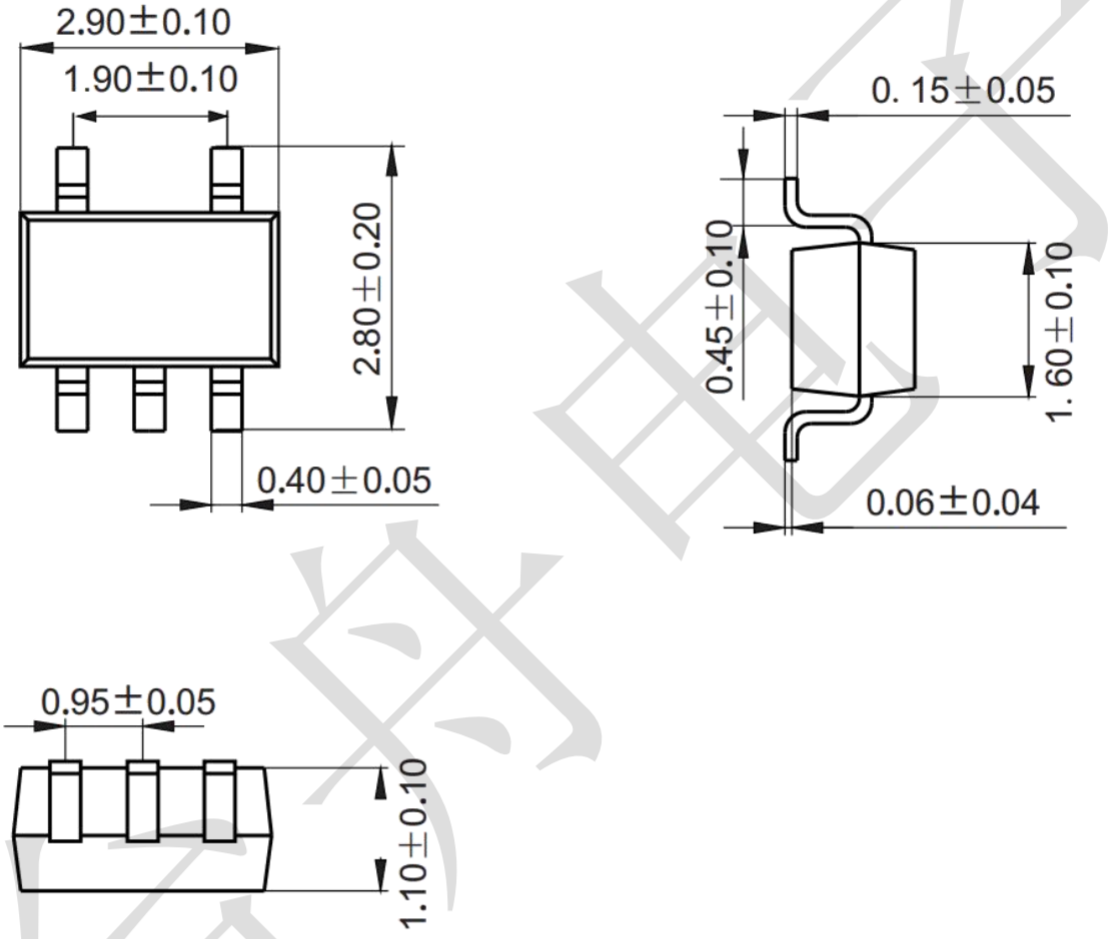

Mounting Pad Layout (unit: mm)

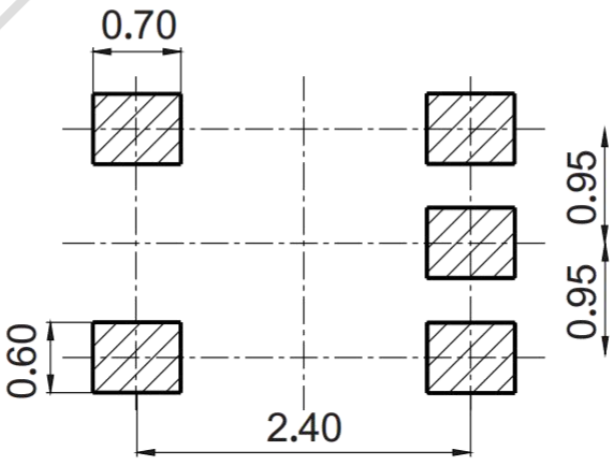

Package informantion

SOT353 (Unit: mm)

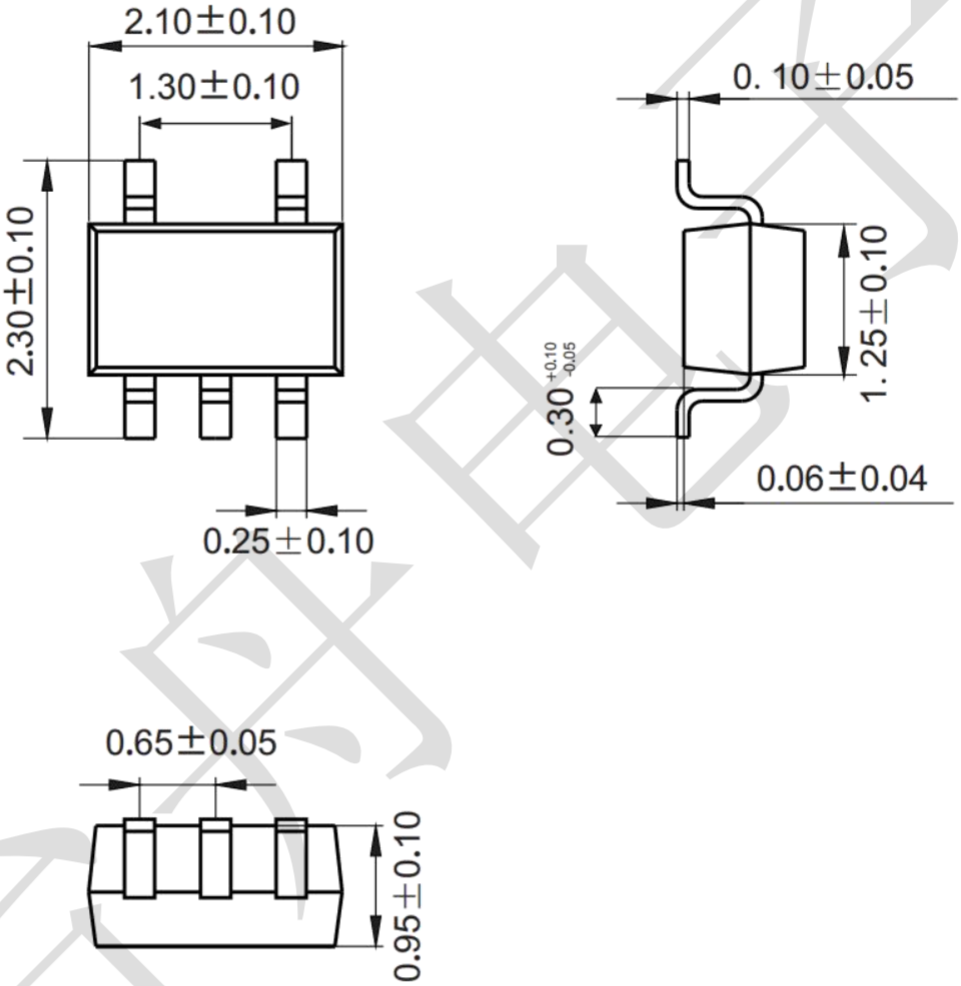

Mounting Pad Layout (unit: mm)

