TECH PUBLIC
台舟电子

74LV1T125GV-TP

SINGLE BUFFER GATE WITH 3-STATE OUTPUT CMOS LOGIC LEVEL SHIFTER

WWW.TECHPUBLIC.COM

Features

- Operate from 1.6V to 5.5V
- Low Power Current: Icc=10μA (Max.)
- ±8mA Output Drive (VCC=5.0V)
- Power Down Protection
- ESD Protection Exceeds JESD 22
  -2000-V Human-Body Model (A114-A)
  -200-V Machine Model (A115-A)
  -1000-V Charged-Device Model (C101)

Applications

- AV Receiver
- Audio Dock:Portable
- Blu-ray Player and Home Theater
- Embedded PC
- Personal Digital Assistant(PDA)
- Power:Telecom/Server AC/DC Supply:Single Controller:Analog and Digital
- Solid State Drive(SSD):Client and Enterprise
- Wireless Headset,Keyboard,and Mouse

General Description

The 74LV1T125GV-TP is a single, level translating buffer driver with 3-state output. The 3-state output is controlled by the output enable input (OE). A HIGH-level at OE causes the output to assume a high-impedance OFF-state. The output level is referenced to the supply voltage and supports 1.8V, 2.5V, 3.3V and 5.0V CMOS levels. The low threshold inputs support 1.8V input logic at VCC = 3.3V and can be used in 1.8V to 3.3V level up translation. In addition, the 5V tolerant input pins enable down translation (3.3V to 2.5V output at VCC = 2.5V).

Logic Diagram

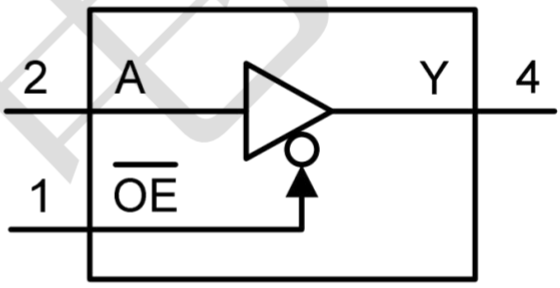

Logic Symbol

Ordering Information

ORDER NUMBER	PACKAGE DESCRIPTION	PACKAGE OPTION
74LV1T125GV-TP	SOT23-5	Tape and Reel,3000

Pin Configuratio

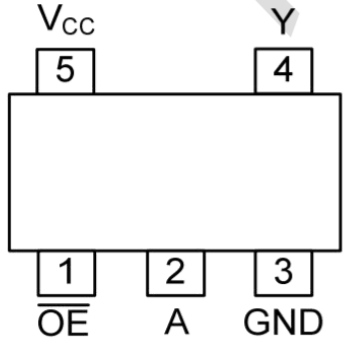

SOT23-5

Function Table

INPUT (Lower Level Input)		OUTPUT (VCC CMOS)
$\overline{OE}$ (Note 3)	A	Y
L	H	H
L	L	L
H	X	Z

Notes:

1. H = HIGH Voltage Level; L = LOW Voltage Level; X = Do don't care; Z = high-impedance.
2. H = Driving High; L = Driving Low; Z = High-Impedance State.
3. Not recommend to float $\overline{OE}$ pin for signal oscillation.

Absolute Maximum Ratings

PARAMETER	SYMBOL	TEST CONDITIONS	RATINGS	UNIT
Supply Voltage	V_{CC}		-0.5 ~ 7	V
Input Voltage (Note 2)	V_{IN}		-0.5 ~ 7	V
Output Voltage (Note 2)	V_{OUT}	Output in the high-impedance or power-off state	-0.5 ~ 4.6	V
		Output in the high or low state	-0.5 ~ V_{CC}+0.5	V
Continuous Output Current	I_{OUT}		±25	mA
Continuous current through		V_{CC} or GND	±50	mA
Input Clamp Current	I_{IK}	V_{IN}<0	-20	mA
Output Clamp Current	I_{OK}	V_{OUT}<0 or V_{OUT} >V_{CC}	±20	mA
Storage Temperature Range	T_{STG}		-65 ~ +150	°C

Notes:

1. Absolute maximum ratings are those values beyond which the device could be permanently damaged.Absolute maximum ratings are stress ratings only and functional device operation is not implied.
2.The input and output voltage ratings may be exceeded if the input and output current ratings are observed.

Recommended Operating Conditions

PARAMETER	SYMBOL	TEST CONDITIONS	MIN	TYP	MAX	UNIT
Supply Voltage	V_{CC}	Operating	1.6	--	5.5	V
Input Voltage	V_{IN}		0	--	5.5	V
Output Voltage	V_{OUT}		0	--	V_{CC}	V
Input Transition Rise or Fall Rate	$\Delta t/\Delta v$	V_{CC}=1.8V	--	--	20	ns/V
		V_{CC}=3.3Vor 2.5V	--	--	20	ns/V
		V_{CC}=5V	--	--	20	ns/V
Operating Temperature	T_A		-40	--	+125	°C

STATIC CHARACTERISTICS (T_A=25°C, unless otherwise specified)

PARAMETER	SYMBOL	TEST CONDITIONS		MIN	TYP	MAX	UNIT
High-Level Input Voltage	V_{IH}	V_{CC} =1.65V~1.8V		0.95	--	--	V
		V_{CC} =2.0V		0.99	--		V
		V_{CC} =2.25V~2.5V		1.145	--	--	V
		V_{CC} =2.75V		1.22	--	--	V
		V_{CC} =3V~3.3V		1.37	--	--	V
		V_{CC} =3.6V		1.47	--	--	V
		V_{CC} =4.5V~5.0V		2.02	--	--	V
		V_{CC} =5.5V		2.1	--	--	V
Low-Level Input Voltage	V_{IL}	V_{CC} =1.65V~2V		--	--	0.57	V
		V_{CC} =2.25V~2.75V		--	--	0.75	V
		V_{CC} =3V~3.6V		--	--	0.8	V
		V_{CC} =4.5V~5.5V		--	--	0.8	V
High-Level Output Voltage	V_{OH}	V_{CC} =1.65V ~ 5.5V, I_{OH}=-20μA		V_{CC}-0.1	--	--	V
		V_{CC} =1.65V	I_{OH}=-2mA	1.28	--	--	V
		V_{CC} =1.8V		1.5	--	--	V
		V_{CC} =2.3V, I_{OH}=-3mA		2	--	--	V
		V_{CC} =2.5V, I_{OH}=-3mA		2.25	--	--	V
		V_{CC} =3V	I_{OH}=-3mA	2.78	--	--	V
			I_{OH}=-5.5mA	2.6	--	--	V
		V_{CC} =3.3V, I_{OH}=-5.5mA		2.9	--	--	V
		V_{CC} =4.5V	I_{OH}=-4mA	4.2	--	--	V
			I_{OH}=-8mA	4.1	--	--	V
		V_{CC} =5V, I_{OH}=-8mA		4.6	--	--	V
Low-Level Output Voltage	V_{OL}	V_{CC} =1.65V ~ 5.5V, I_{OL}=20μA		--	--	0.1	V
		V_{CC} =1.65V, I_{OL}=2mA		--	--	0.2	V
		V_{CC} =2.3V, I_{OL}=3mA		--	--	0.15	V
		V_{CC} =3V	I_{OL}=3mA	--	--	0.11	V
			I_{OL}=5.5mA	--	--	0.21	V
		V_{CC} =4.5V	I_{OL}=4mA	--	--	0.15	V
			I_{OL}=8mA	--	--	0.3	V

STATIC CHARACTERISTICS (Cont.)

PARAMETER	SYMBOL	TEST CONDITIONS		MIN	TYP	MAX	UNIT
A Input Leakage Current	$I_{I(LEAK)}$	A Input V_{CC} =0V, 1.8V, 2.5V, 3.3V, 5.5V, V_{IN}=0V or V_{CC}		--	--	0.1	μA
Quiescent Supply Current	I_Q	V_{CC} =1.8V, 2.5V, 3.3V, 5V, V_{IN}=0V or V_{CC}, I_O=0; Open on loading		--	--	1.0	μA
Additional Quiescent Supply Current	I_Q	V_{CC}=5.5V, one input at 0.3V or 3.4V, other inputs at 0 or V_{CC}, I_O=0		--	--	1.35	mA
		V_{CC}=1.8V, one input at 0.3V or 1.1V, other inputs at 0 or V_{CC}, I_O=0		--	--	10	μA
Input Capacitance	C_{IN}	V_{CC} =3.3V, V_{IN}=V_{CC} or GND		--	2.0	--	pF
Output Capacitance	C_{OUT}	V_{CC} =3.3V, V_{OUT}=V_{CC} or GND		--	2.5	--	pF
Power Dissipation Capacitance	C_{PD}	f=1MHz and 10MHz	V_{CC}=1.8V±0.15V	--	14	--	pF
			V_{CC}=2.5V±0.2V	--	14	--	pF
			V_{CC}=3.3V±0.3V	--	14	--	pF
			V_{CC}=5V±0.5V	--	14	--	pF

THERMAL DATA

PARAMETER		SYMBOL	RATINGS	UNIT
Junction to Ambient	SOT23-5	θJA	230	°C/W

DYNAMIC CHARACTERISTICS

(T_A=25°C, unless otherwise specified)

PARAMETER	SYMBOL	TEST CONDITIONS		MIN	TYP	MAX	UNIT
Propagation delay from input (Any In) to output(Y)	t_{PLH}/t_{PHL}	C_L=15pF	V_{CC}=1.8V	--	10.5	13	ns
			V_{CC}=2.5V	--	5.8	8.5	ns
			V_{CC}=3.3V	--	4.0	7.0	ns
			V_{CC}=5V	--	2.7	5.5	ns
		C_L=30pF	V_{CC}=1.8V	--	12	14.5	ns
			V_{CC}=2.5V	--	6.5	9.5	ns
			V_{CC}=3.3V	--	4.9	8.0	ns
			V_{CC}=5V	--	3.0	6.5	ns
Propagation delay from input (OE) to output(Y)	t_{PZH}/t_{PZL}	C_L=15pF	V_{CC}=1.8V	--	9.0	12	ns
			V_{CC}=2.5V	--	5.5	8.0	ns
			V_{CC}=3.3V	--	4.0	6.5	ns
			V_{CC}=5V	--	3.0	5.0	ns
		C_L=30pF	V_{CC}=1.8V	--	12.5	15	ns
			V_{CC}=2.5V	--	7.0	10	ns
			V_{CC}=3.3V	--	5.0	8.0	ns
			V_{CC}=5V	--	4.3	6.5	ns
Propagation delay from input (OE) to output(Y)	t_{PHZ}/t_{PLZ}	C_L=15pF	V_{CC}=1.8V	--	8.0	10	ns
			V_{CC}=2.5V	--	5.0	11	ns
			V_{CC}=3.3V	--	4.5	7.0	ns
			V_{CC}=5V	--	4.2	6.5	ns
		C_L=30pF	V_{CC}=1.8V	--	8.5	11	ns
			V_{CC}=2.5V	--	6.0	9.0	ns
			V_{CC}=3.3V	--	5.0	8.0	ns
			V_{CC}=5V	--	4.8	8.0	ns

TYPICAL DESIGN EXAMPLES

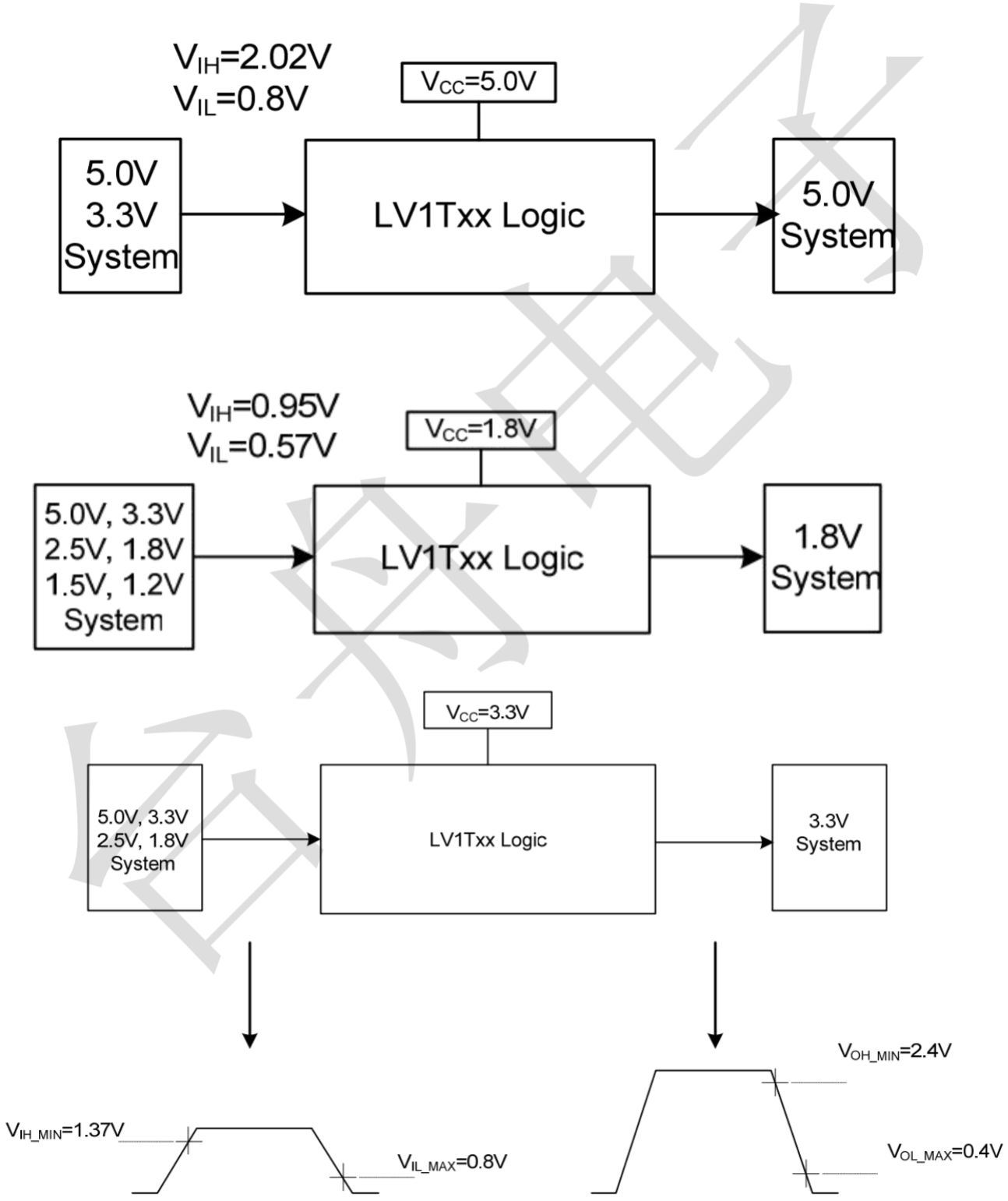

Switching Thresholds for 1.8V~3.3V Translation

TEST CIRCUIT AND WAVEFORMS

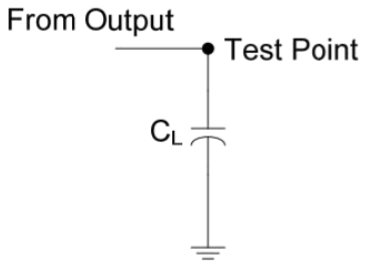

LOAD CIRCUIT FOR
TOTEM-POLE OUTPUTS

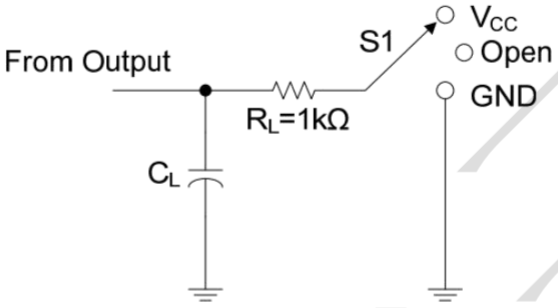

TEST	S1
t_{PLH}/t_{PHL}	Open
t_{PLZ}/t_{PZL}	V_{CC}
t_{PHZ}/t_{PZH}	GND
Open Drain	V_{CC}

LOAD CIRCUIT FOR
3-STATE AND OPEN-DRAIN OUTPUTS

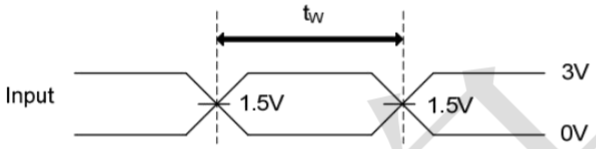

PULSE DURATION

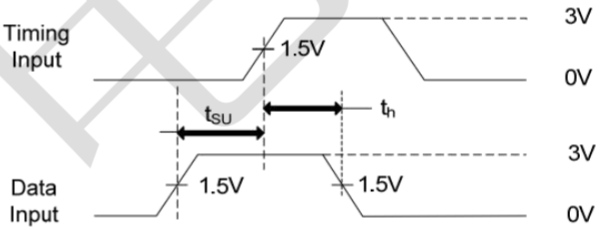

SETUP AND HOLD TIMES

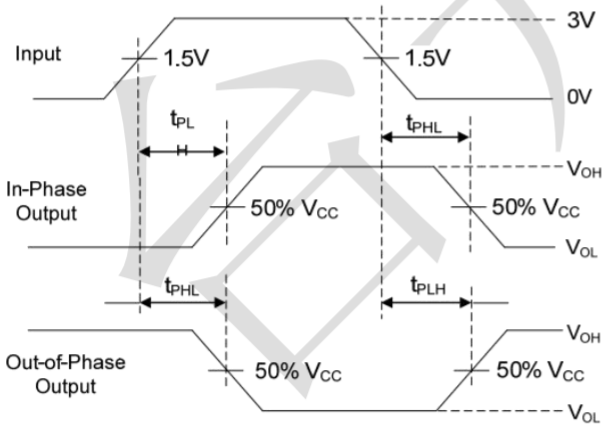

PROPAGATION DELAY TIMES

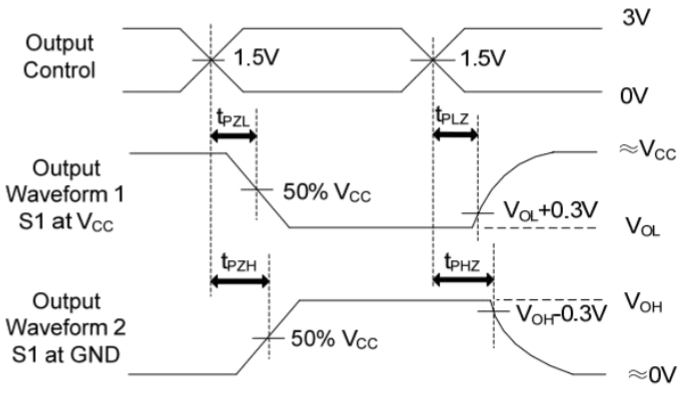

ENABLE AND DISABLE TIMES

Notes:

1. All input pulses are supplied by generators having the following characteristics: PRR ≤ 1MHz, ZO=50Ω, tr ≤ 3ns.
2. The outputs are measured one at a time, with one transition per measurement.

Package information (Unit: mm)

SOT23-5

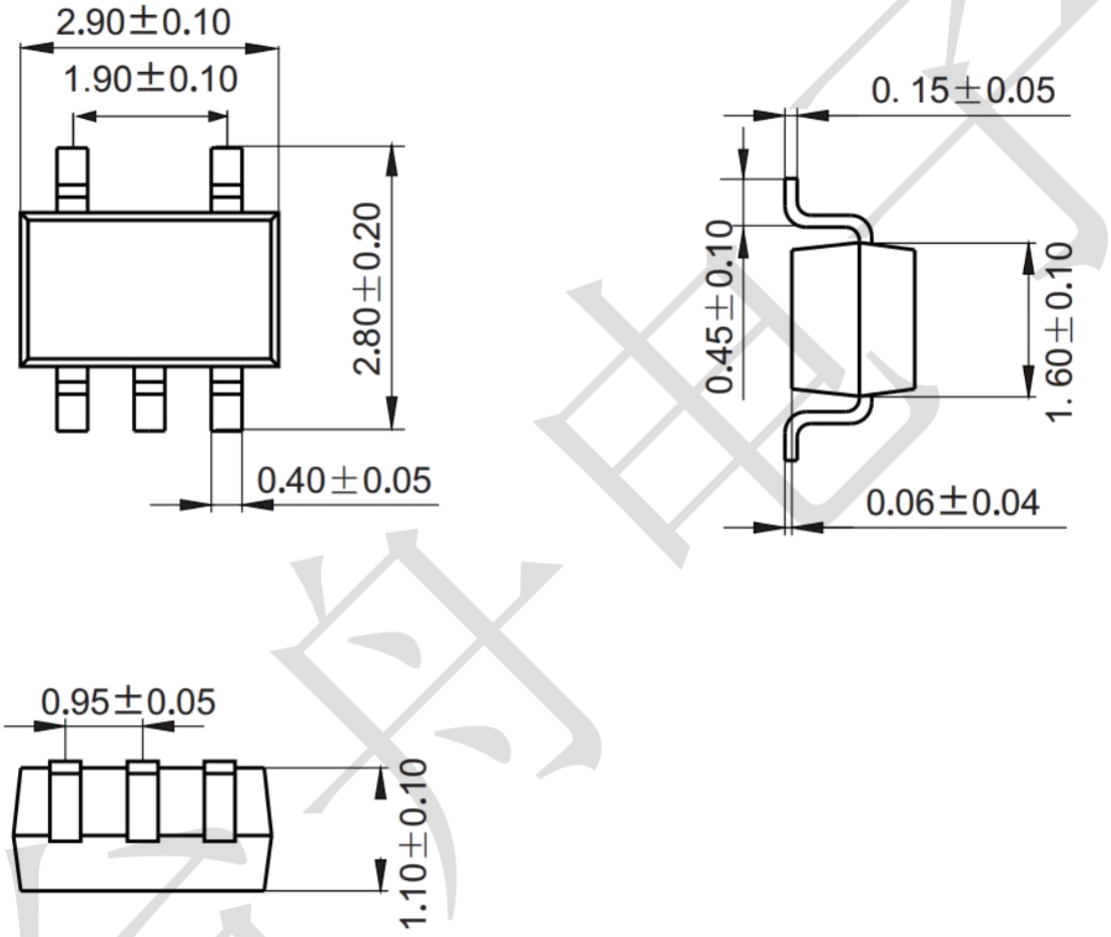

Mounting Pad Layout (unit: mm)

