TECH PUBLIC
台舟电子

74LV1T34 Series

SINGLE BUFFER GATE CMOS LOGIC LEVEL SHIFTER

WWW.TECHPUBLIC.COM

Features

- Operate from 1.6V to 5.5V
- Low Power Current: Icc=10μA (Max.)
- ±8mA Output Drive (VCC=5.0V)
- Power Down Protection
- ESD Protection Exceeds JESD 22
  -2000-V Human-Body Model (A114-A)
  -200-V Machine Model (A115-A)
  -1000-V Charged-Device Model (C101)

Applications

- AV Receiver
- Audio Dock:Portable
- Blu-ray Player and Home Theater
- Embedded PC
- Personal Digital Assistant(PDA)
- Power:Telecom/Server AC/DC Supply:Single Controller:Analog and Digital
- Solid State Drive(SSD):Client and Enterprise
- Wireless Headset,Keyboard,and Mouse

General Description

The is device is a low voltage CMOS gate logic that operates at a wider voltage range for industrial, portable, and telecom applications. The input is designed with a lower threshold circuit to match 1.8 V input logic at VCC= 3.3V and can be used in 1.8V to 3.3V level up translation.

Logic Diagram

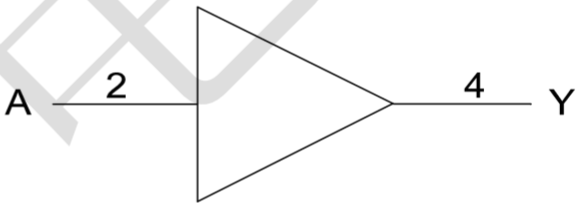

Logic symbol

Ordering Information

ORDER NUMBER	PACKAGE DESCRIPTION	PACKAGE OPTION
74LV1T34GV-TP	SOT23-5	Tape and Reel,3000
74LV1T34GW-TP	SOT353	Tape and Reel,3000

Pin Configuratio

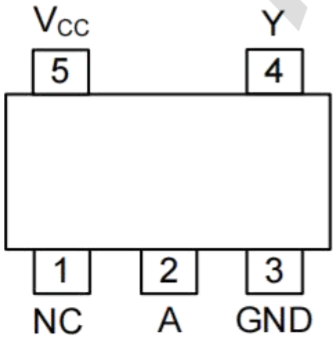

SOT23-5 / SOT353

Function Table

INPUT (Lower Level Input)	OUTPUT (V_{CC} CMOS)
A	Y
H	H
L	L

Note: H: HIGH voltage level; L: LOW voltage level.

Absolute Maximum Ratings

PARAMETER	SYMBOL	TEST CONDITIONS	RATINGS	UNIT
Supply Voltage	V_{CC}		-0.5 ~ 7	V
Input Voltage (Note 2)	V_{IN}		-0.5 ~ 7	V
Output Voltage (Note 2)	V_{OUT}	Output in the high-impedance or power-off state	-0.5 ~ 4.6	V
		Output in the high or low state	-0.5 ~ V_{CC}+0.5	V
Continuous Output Current	I_{OUT}		±25	mA
Continuous current through		V_{CC} or GND	±50	mA
Input Clamp Current	I_{IK}	V_{IN}<0	-20	mA
Output Clamp Current	I_{OK}	V_{OUT}<0 or V_{OUT} >V_{CC}	±20	mA
Storage Temperature Range	T_{STG}		-65 ~ +150	°C

Notes:

1. Absolute maximum ratings are those values beyond which the device could be permanently damaged.Absolute maximum ratings are stress ratings only and functional device operation is not implied.
2. The input and output voltage ratings may be exceeded if the input and output current ratings are observed.

Recommended Operating Conditions

PARAMETER	SYMBOL	TEST CONDITIONS	MIN	TYP	MAX	UNIT
Supply Voltage	V_{CC}	Operating	1.6	--	5.5	V
Input Voltage	V_{IN}		0	--	5.5	V
Output Voltage	V_{OUT}		0	--	V_{CC}	V
Input Transition Rise or Fall Rate	$\Delta t/\Delta v$	V_{CC}=1.8V	--	--	20	ns/V
		V_{CC}=3.3Vor 2.5V	--	--	20	ns/V
		V_{CC}=5V	--	--	20	ns/V
Operating Temperature	T_A		-40	--	+125	°C

OPERATING CHARACTERISTICS (f=1MHz &10MHz, TA =25°C , unless otherwise specified)

PARAMETER	SYMBOL	TEST CONDITIONS	MIN	TYP	MAX	UNIT
Power Dissipation Capacitance	C_{PD}	V_{CC}=1.8V±0.15V,V_{CC}=2.5V±0.2V	--	14	--	pF
		V_{CC}=3.3V±0.3V,V_{CC}=5.0V±0.5V	--	14	--	pF
Input Capacitance	C_{IN}	V_{CC} =3.3V, V_{IN}=V_{CC} or GND	--	2	--	pF
Output Capacitance	C_{OUT}	V_{CC} =3.3V, V_{OUT}=V_{CC} or GND	--	2.5	--	pF

STATIC CHARACTERISTICS (T_A=25°C, unless otherwise specified)

PARAMETER	SYMBOL	TEST CONDITIONS	T_A=25°C			T_A=-40~+125°C			UNIT
			MIN	TYP	MAX	MIN	TYP	MAX	
High-Level Input Voltage	V_{IH}	V_{CC} =1.65V~1.8V	0.95	--	--	1.03	--	--	V
		V_{CC} =2.0V	0.99	--	--	1.18	--	--	V
		V_{CC} =2.25V~2.5V	1.145	--	--	1.18	--	--	V
		V_{CC} =2.75V	1.22	--	--	1.25	--	--	V
		V_{CC} =3V~3.3V	1.37	--	--	1.39	--	--	V
		V_{CC} =3.6V	1.47	--	--	1.48	--	--	V
		V_{CC} =4.5V~5.5V	2.02	--	--	2.03	--	--	V
		V_{CC} =5.5V	2.1	--	--	2.11	--	--	V
Low-Level Input Voltage	V_{IL}	V_{CC} =1.65V~2V	--	--	0.57	--	--	0.55	V
		V_{CC} =2.25V~2.75V	--	--	0.75	--	--	0.71	V
		V_{CC} =3V~3.6V	--	--	0.8	--	--	0.65	V
		V_{CC} =4.5V~5.5V	--	--	0.8	--	--	0.8	V
High-Level Output Voltage	V_{OH}	V_{CC} =1.65V ~ 5.5V, I_{OH}=-20μA	V_{CC}-0.1	--	--	--	V_{CC}-0.1	--	V
		V_{CC} =1.65V, I_{OH}=-2mA	1.28	--	--	--	1.21	--	V
		V_{CC} =1.8V, I_{OH}=-2mA	1.5	--	--	--	1.45	--	V
		V_{CC} =2.3V, I_{OH}=-3mA	2	--	--	--	1.93	--	V
		V_{CC} =2.5V, I_{OH}=-3mA	2.25	--	--	--	2.15	--	V
		V_{CC} =3V, I_{OH}=-3mA	2.78	--	--	--	2.7	--	V
		V_{CC} =3V, I_{OH}=-5.5mA	2.6	--	--	--	2.49	--	V
		V_{CC} =3.3V, I_{OH}=-5.5mA	2.9	--	--	--	2.8	--	V
		V_{CC} =4.5V, I_{OH}=-4mA	4.2	--	--	--	4.1	--	V
		V_{CC} =4.5V, I_{OH}=-8mA	4.1	--	--	--	3.95	--	V
		V_{CC} =5V, I_{OH}=-8mA	4.6	--	--	--	4.5	--	V

STATIC CHARACTERISTICS (Cont.)

PARAMETER	SYMBOL	TEST CONDITIONS		T_A=25°C			T_A=-40~+125°C			UNIT
				MIN	TYP	MAX	MIN	TYP	MAX	
Low-Level Output Voltage	V_{OL}	V_{CC} =1.65V ~ 5.5V, I_{OL}=20μA		--	--	0.1	--	--	0.1	V
		V_{CC} =1.65V, I_{OL}=2mA		--	--	0.2	--	--	0.25	V
		V_{CC} =2.3V, I_{OL}=3mA		--	--	0.15	--	--	0.2	V
		V_{CC} =3V	I_{OL}=3mA	--	--	0.11	--	--	0.15	V
			I_{OL}=5.5mA	--	--	0.21	--	--	0.252	V
		V_{CC} =4.5V	I_{OL}=4mA	--	--	0.15	--	--	0.2	V
			I_{OL}=8mA	--	--	0.3	--	--	0.35	V
A Input Leakage Current	$I_{I(LEAK)}$	V_{CC} =0V, 1.8V, 2.5V, 3.3V, 5.5V, V_{IN}=0V or V_{CC}		--	--	0.1	--	--	±1	μA
Quiescent Supply Current	I_Q	V_{CC} =1.8V, 2.5V, 3.3V, 5V, V_{IN}=0V or V_{CC}, I_O=0; Open on loading		--	--	1	--	--	10	μA
Additional Quiescent Supply Current	I_Q	V_{CC}=5.5V, one input at 0.3V or 3.4V, other inputs at 0 or V_{CC}, I_O=0		--	--	1.35	--	--	1.5	mA
		V_{CC}=1.8V, one input at 0.3V or 1.1V, other inputs at 0 or V_{CC}, I_O=0		--	--	10	--	--	13	μA

DYNAMIC CHARACTERISTICS (T_A=25°C, unless otherwise specified)

PARAMETER	SYMBOL	TEST CONDITIONS		T_A=25°C			T_A=-40~+125°C			UNIT
				MIN	TYP	MAX	MIN	TYP	MAX	
Propagation delay from input (Any In) to output(Y)	t_{PLH}/t_{PHL}	C_L=15pF	V_{CC}=1.8V	--	10.5	13	--	--	14.3	ns
			V_{CC}=2.5V	--	5.8	8.5	--	--	9.7	ns
			V_{CC}=3.3V	--	4	7	--	--	8.2	ns
			V_{CC}=5V	--	2.7	6	--	--	7.1	ns
		C_L=30pF	V_{CC}=1.8V	--	12	14.5	--	--	15.8	ns
			V_{CC}=2.5V	--	6.5	9.5	--	--	10.7	ns
			V_{CC}=3.3V	--	4.9	8	--	--	9.2	ns
			V_{CC}=5V	--	3	7	--	--	8.1	ns

THERMAL DATA

PARAMETER		SYMBOL	RATINGS	UNIT
Junction to Ambient	SOT23-5	θJA	230	°C/W
	SOT-353		350	°C/W

TYPICAL DESIGN EXAMPLES

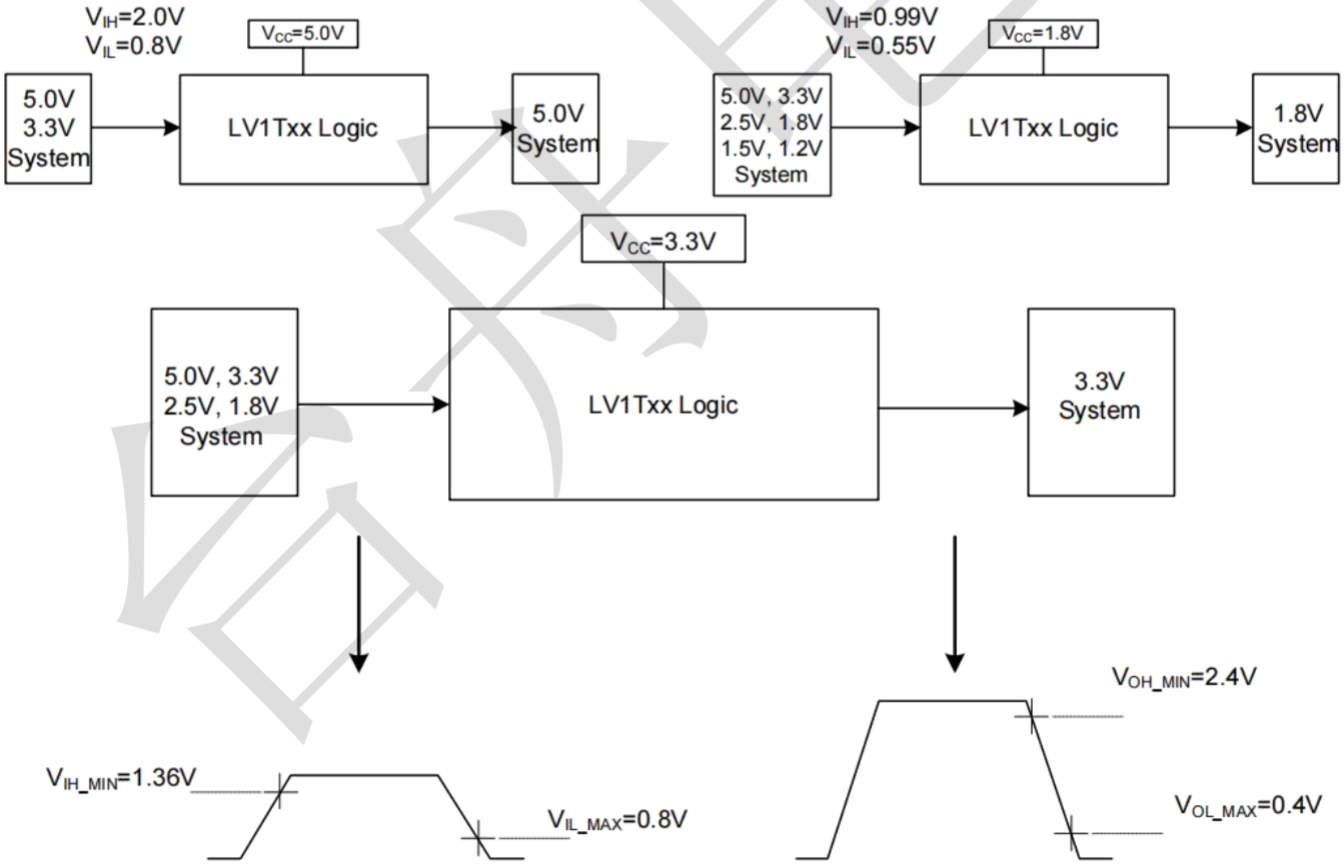

Switching Thresholds for 1.8V~3.3V Translation

TEST CIRCUIT AND WAVEFORMS

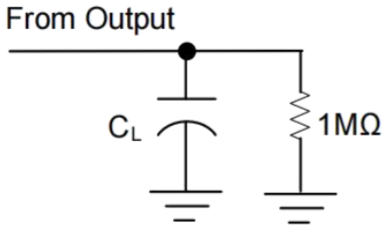

TEST CIRCUIT

	V_{CC}=1.8V~5V
C_L	15, 30pF
V_{MI}	V_I/2
V_{MO}	V_{CC}/2

Note: C_L includes probe and jig capacitance.

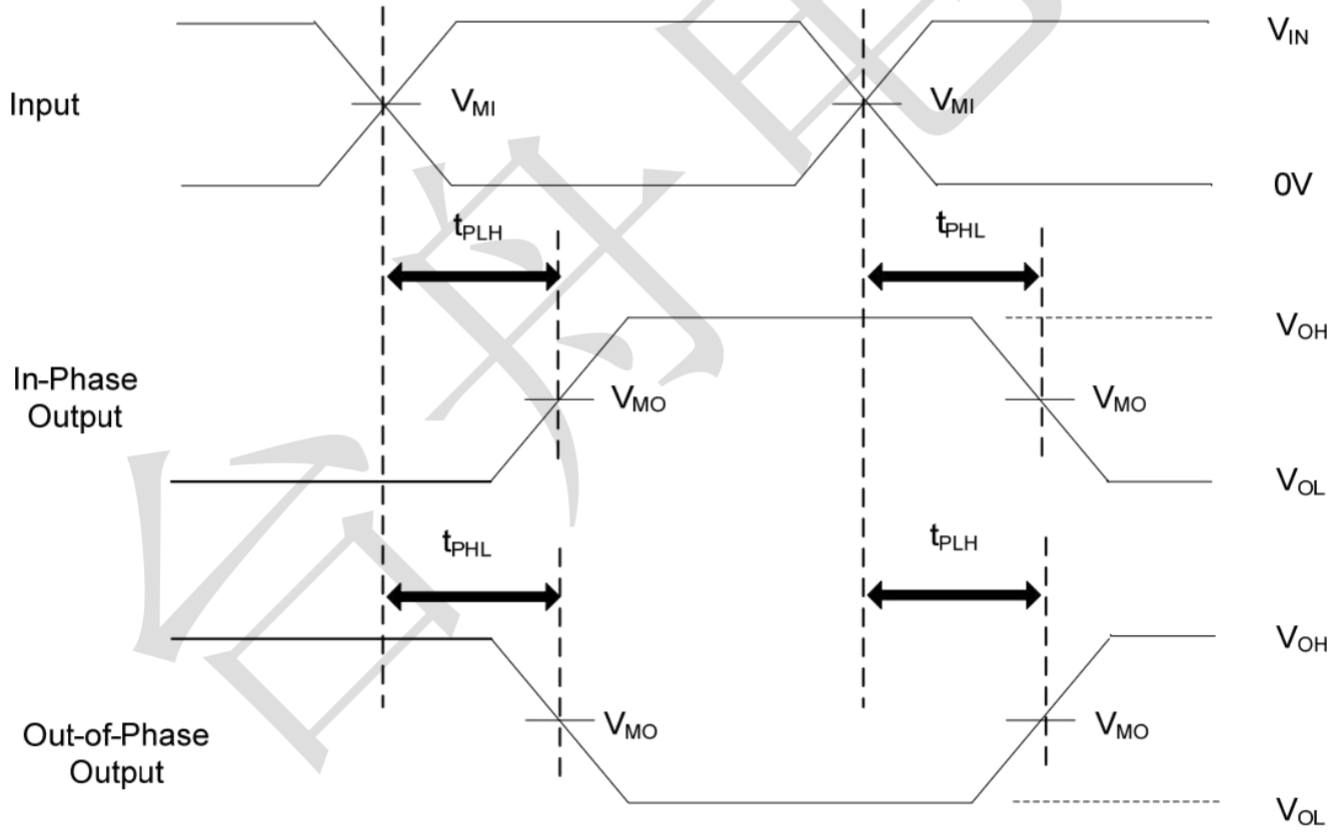

Notes:

1. All input pulses are supplied by generators having the following characteristics: PRR ≤ 1MHz, ZO=50Ω, tr ≤ 3ns.
2. The outputs are measured one at a time, with one transition per measurement.

Package information (Unit: mm)

SOT23-5

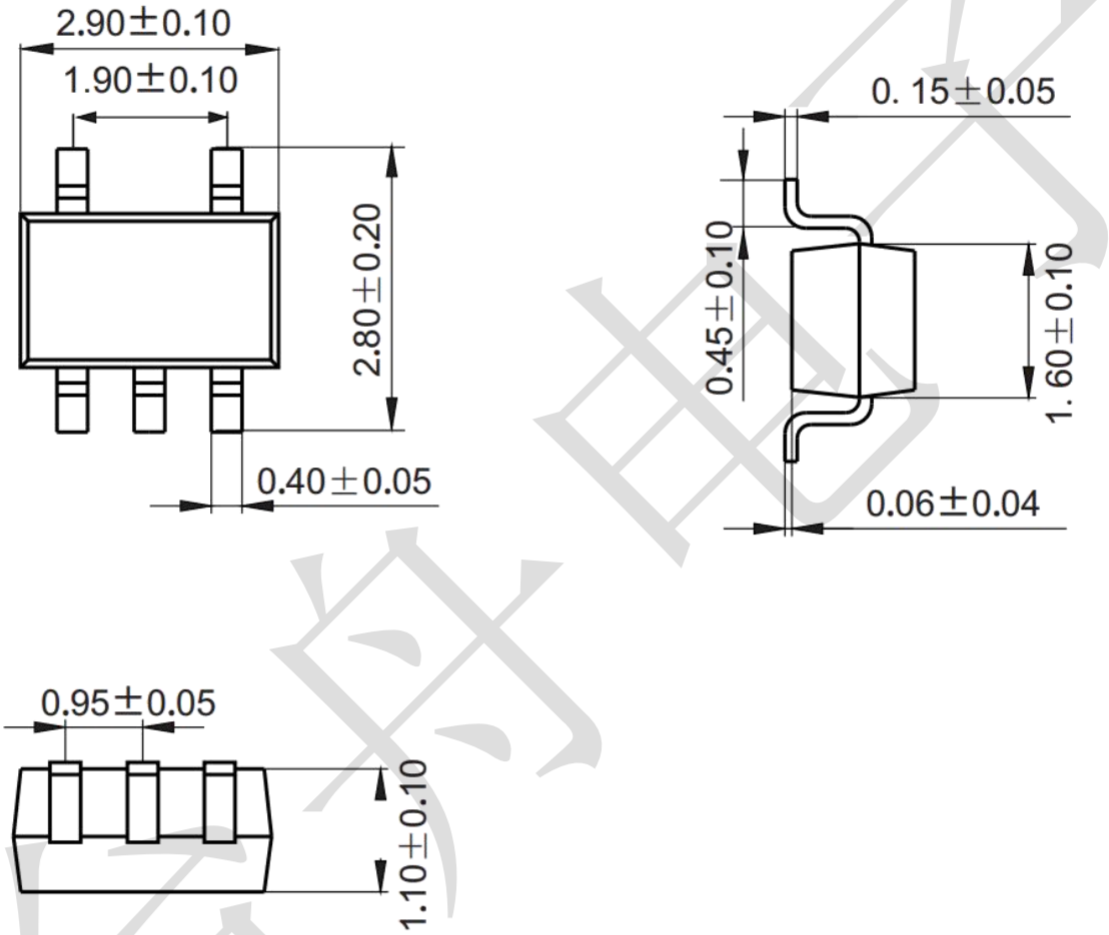

Mounting Pad Layout (unit: mm)

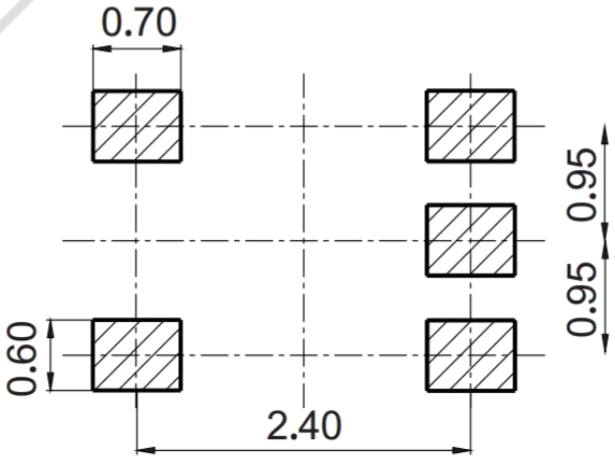

Package information (Unit: mm)

SOT353

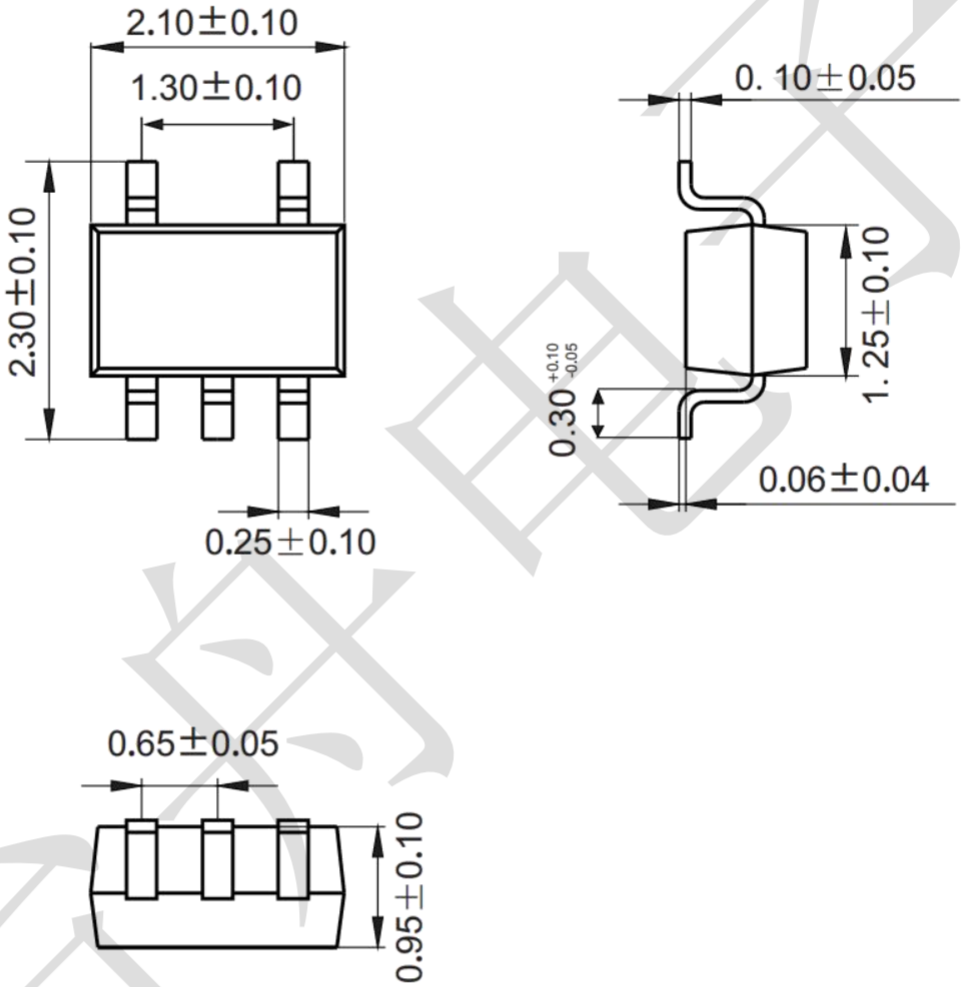

Mounting Pad Layout (unit: mm)

