1. Description

The ESD701DPYR(ES) is a Transient Voltage Suppressor Arrays that designed to protect components which are connected to data and transmission lines against electrostatic discharge (ESD), electrical fast Transients (EFT), and lightning. All pins are rated to withstand 30kV ESD pulses using the IEC61000-4-2 air discharge method.

2. Features

- IEC 61000-4-2 Level 4 ESD Protection
  - ±30kV Contact Discharge
  - ±30kV Air Discharge
- 300W Peak pulse Power (8/20us)
- Low clamping voltage
- Working voltage: 24V
- Low leakage current
- RoHS compliant
- Protecting one bidirectional line

3. Applications

- Portable electronics
- Control & monitoring systems
- Servers, notebooks, and desktop PCs
- CAN bus protection
- Automotive application
- Cellular handsets and accessories

4. Ordering Information

Part Number	Package	Marking	Material	Packing	Quantity per reel	Flammability Rating	Reel Size
ESD701DPYR(ES)	DFN1006-2L	CG4	Halogen free	Tape & Reel	10,000 PCS	UL 94V-0	7 inches

Table-1 Ordering information

5. Pin Configuration and Functions

Pin	Name	Description	Outline	Circuit Diagram
1	IO	Connect to IO	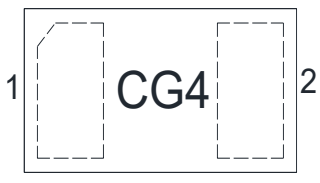	
2	IO	Connect to IO		

6. Specification

6.1. Absolute Maximum rating

Over operating free-air temperature range (unless otherwise noted)

Parameters	Symbol	Min.	Max.	Unit
Peak pulse power (tp=8/20us)@25℃	P_{pk}	-	300	W
Peak pulse current (tp=8/20us)@25℃	I_{PP}		5.5	A
ESD (IEC61000-4-2 air discharge) @25℃	V_{ESD}	-	±30	kV
ESD (IEC61000-4-2 contact discharge) @25℃	V_{ESD}	-	±30	kV
Junction temperature	T_J	-	150	℃
Operating temperature	T_{OP}	-40	125	℃
Storage temperature	T_{STG}	-55	150	℃
Lead temperature	T_L	-	260	℃

Table-2 Absolute Maximum rating

Copyright© ElecSuper Incorporated

6.2. Electrical Characteristics

At TA = 25℃ unless otherwise noted

Parameter	Symbol	Conditions	Min.	Typ.	Max.	Units
Reverse Stand-off Voltage	V_{RWM}				24.0	V
Reverse Breakdown Voltage	V_{BR}	IT=1mA	24.5	28.0		V
Reverse Leakage Current	I_R	VRWM=24V			100	nA
Clamping Voltage	V_C	IPP=1A; tp=8/20us		34.0		V
Clamping Voltage	V_C	IPP=5.5A; tp=8/20us		46.0		V
Junction Capacitance	C_J	VR=0V; f=1MHz		10	20	pF

Table-4 Electrical Characteristics

Symbol	Parameters
V_{RWM}	Peak Reverse Working Voltage
I_R	Reverse Leakage Current @ V_{RWM}
V_{BR}	Breakdown Voltage @ I_T
I_T	Test Current
I_{PP}	Maximum Reverse Peak Pulse Current
V_C	Clamping Voltage @ I_{PP}

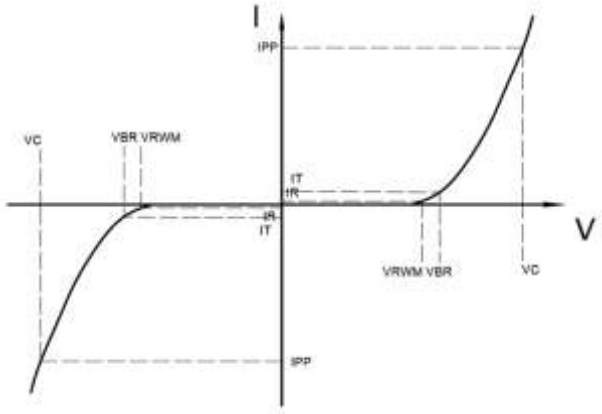

7. Typical Characteristic

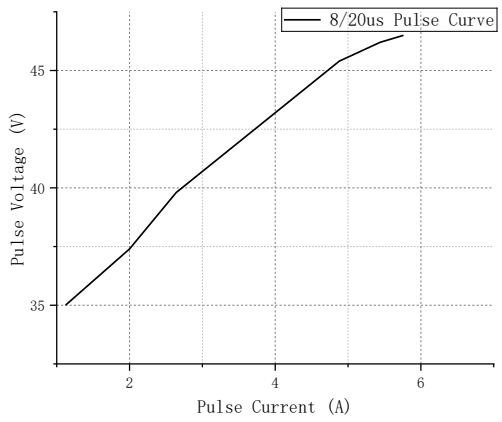

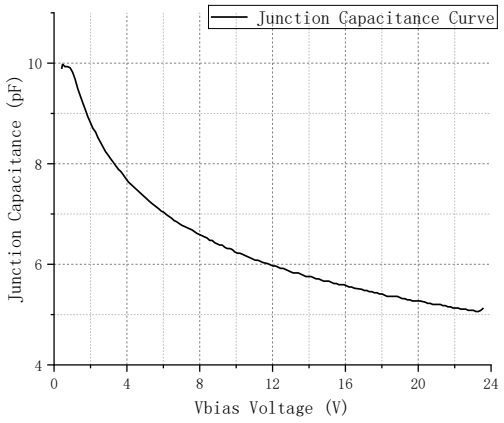

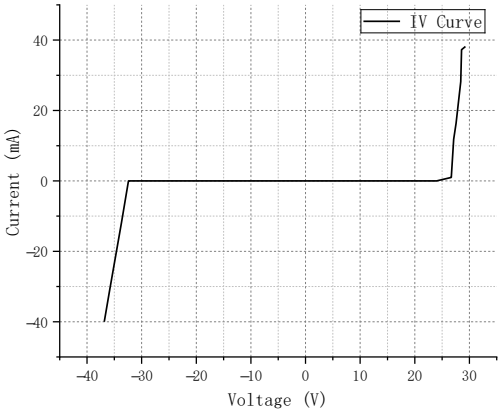

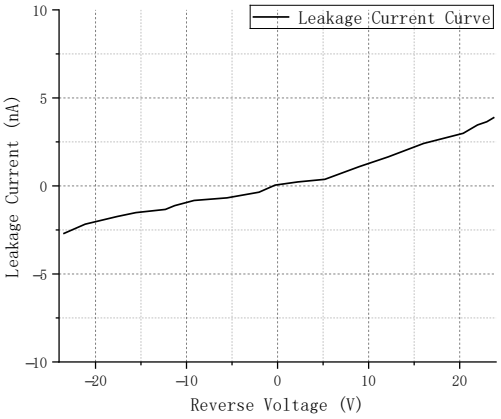

Measurement Wave According to IEC Standard

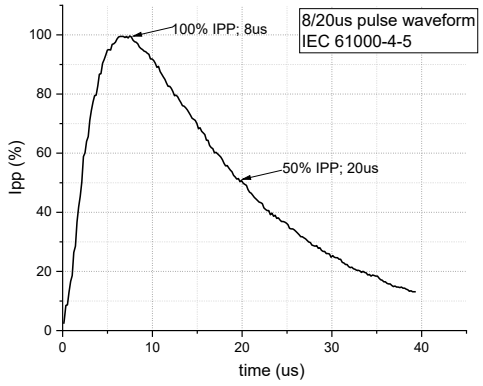

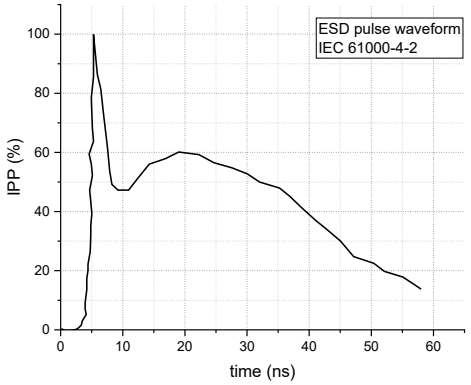

Copyright© ElecSuper Incorporated

8. Dimension (DFN1006-2L)

POD(A)

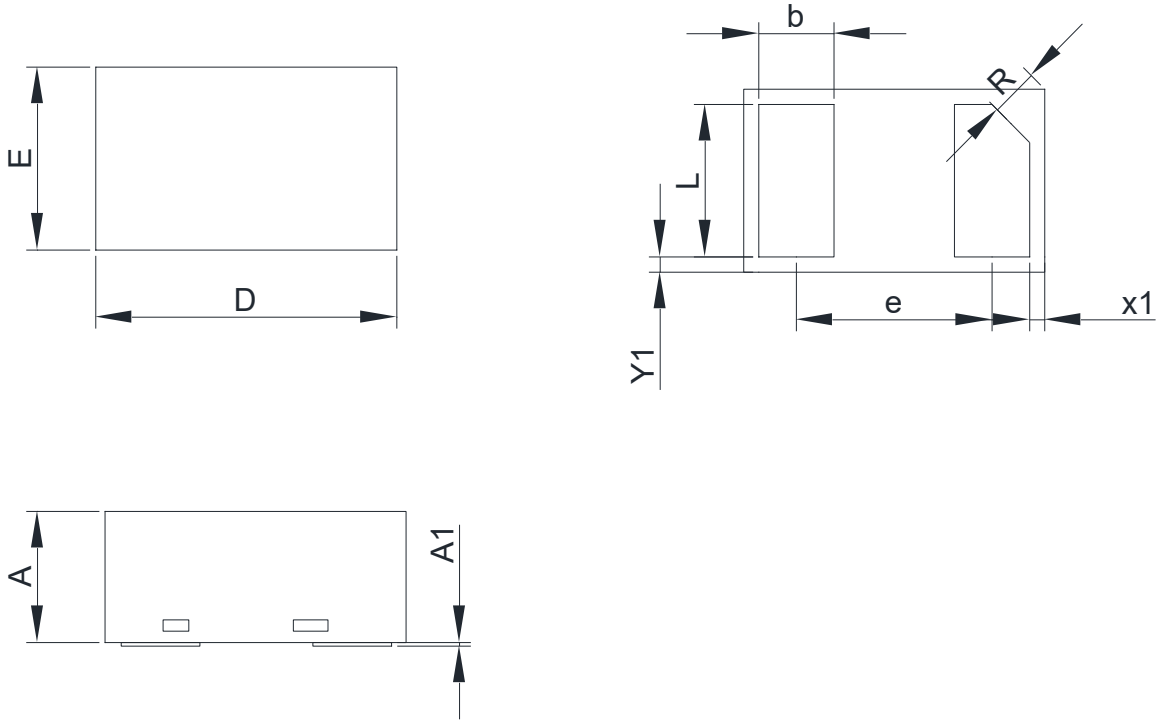

Units in millimeters

Symbol	Min.	Nom.	Max.	Symbol	Min.	Nom.	Max.
A	0.45	0.50	0.55	R	0.07	0.10	0.13
D	0.95	1.00	1.05	X1	0.025		0.065
E	0.55	0.60	0.65	Y1	0.025		0.065
b	0.20	0.25	0.30	A1	0		0.015
L	0.45	0.50	0.55				
e	0.65						

9. Recommended Soldering Footprint

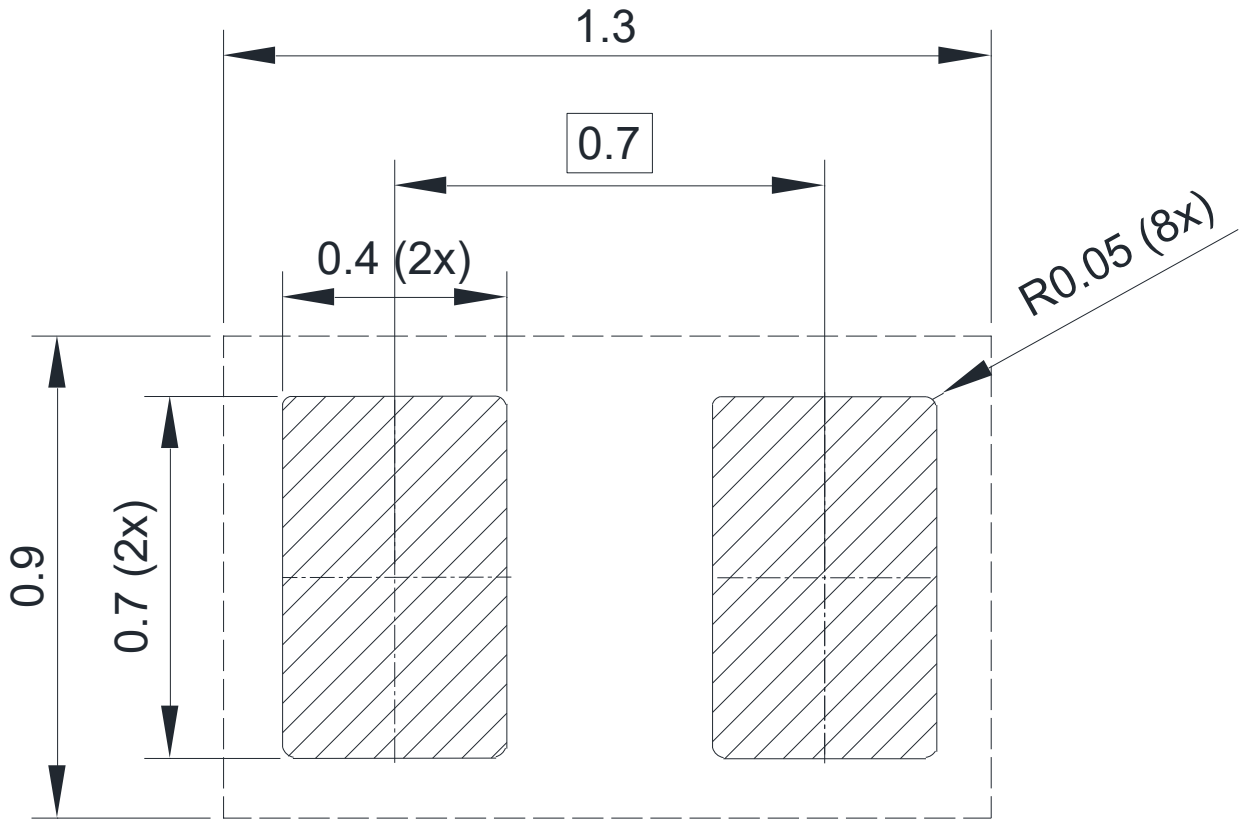

DIMENSIONS: MILLIMETERS

DISCLAIMER

ELECSUPER PROVIDES TECHNICAL AND RELIABILITY DATA (INCLUDING DATASHEETS), DESIGN RESOURCES (INCLUDING REFERENCE DESIGNS), APPLICATION OR OTHER DESIGN ADVICE, SAFETY INFORMATION, AND OTHER RESOURCES “AS IS” AND WITH ALL FAULTS, AND DISCLAIMS ALL WARRANTIES, EXPRESS AND IMPLIED, INCLUDING WITHOUT LIMITATION ANY IMPLIED WARRANTIES OF MERCHANTABILITY, FITNESS FOR A PARTICULAR PURPOSE OR NON-INFRINGEMENT OF THIRD PARTY INTELLECTUAL PROPERTY RIGHTS.

These resources are intended for skilled developers designing with ElecSuper products. You are solely responsible for
(1) selecting the appropriate ElecSuper products for your application;
(2) designing, validating and testing your application;
(3) ensuring your application meets applicable standards, and any other safety, security, or other requirements.
These resources are subject to change without notice. ElecSuper grants you permission to use these resources only for development of an application that uses the ElecSuper products described in the resource. Other reproduction and display of these resources are prohibited. No license is granted to any other ElecSuper intellectual property right or to any third party intellectual property right. ElecSuper disclaims responsibility for, and you will fully indemnify ElecSuper and its representatives against, any claims, damages, costs, losses, and liabilities arising out of your use of these resources. ElecSuper’s products are provided subject to ElecSuper’s Terms of Sale or other applicable terms available either on www.elecsuper.com or provided in conjunction with such ElecSuper products. ElecSuper’s provision of these resources does not expand or otherwise alter ElecSuper’s applicable warranties or warranty disclaimers for ElecSuper products.

Copyright© ElecSuper Incorporated