1. Description

The DESD18VS1BLP3-7(ES) is an ultra-low capacitance TVS (Transient Voltage Suppressor) designed to protect high speed data interfaces. It has been specifically designed to protect sensitive electronic components which are connected to data and transmission lines from over-stress caused by ESD (Electrostatic Discharge). The DESD18VS1BLP3-7(ES) may be used to provide ESD protection up to ±10kV (contact discharge) according to IEC61000-4-2, and withstand peak pulse current up to 4.0A (8/20μs) according to IEC61000-4-5.

2. Features

- IEC 61000-4-2 Level 4 ESD Protection
  - ±10kV Contact Discharge
  - ±10kV Air Discharge
- 30W Peak pulse Power (8/20us)
- Low clamping voltage
- Working voltage: 18V
- Low leakage current
- RoHS compliant
- Protecting one bi-directional line
- Low Junction capacitance: 0.10pF Typ.

3. Applications

- High-speed interfaces
- HDMI and USB 3.2
- Cellular handsets and accessories
- Portable Electronics and Notebooks
- TVs and monitors
- Digital cameras

4. Ordering Information

Part Number	Package	Marking	Material	Packing	Quantity per reel	Flammability Rating	Reel Size
DESD18VS1BLP3-7(ES)	DFN0603-2L	EBA	Halogen free	Tape & Reel	10,000 PCS	UL 94V-0	7 inches

Table-1 Ordering information

Copyright© ElecSuper Incorporated

5. Pin Configuration and Functions

Pin	Name	Description	Outline	Circuit Diagram
1	IO	Connect to IO		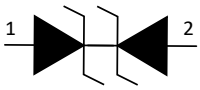
2	IO	Connect to IO		

Table-2 Pin configuration

6. Specification

6.1. Absolute Maximum rating

Over operating free-air temperature range (unless otherwise noted)

Parameters	Symbol	Min.	Max.	Unit
Peak pulse power (tp=8/20us)@25℃	P_{pk}	-	30	W
Peak pulse current (tp=8/20us)@25℃	I_{PP}		4.0	A
ESD (IEC61000-4-2 air discharge) @25℃	V_{ESD}	-	±10	kV
ESD (IEC61000-4-2 contact discharge) @25℃	V_{ESD}	-	±10	kV
Junction temperature	T_J	-	150	℃
Operating temperature	T_{OP}	-50	125	℃
Storage temperature	T_{STG}	-55	150	℃
Lead temperature	T_L	-	260	℃

Table-3 Absolute Maximum rating

Copyright© ElecSuper Incorporated

6.2. Electrical Characteristics

At TA = 25℃ unless otherwise noted

Parameter	Symbol	Conditions	Min.	Typ.	Max.	Units
Reverse Stand-off Voltage	V_{RWM}				18	V
Reverse Breakdown Voltage	V_{BR}	I_T=1mA	19	24		V
Reverse Leakage Current	I_R	V_{RWM}=18.0V			100	nA
Clamping Voltage	V_C	I_{PP}=1.0A; tp=8/20us; 内阻 42Ω		4.0		V
Clamping Voltage	V_C	I_{PP}=4.0A; tp=8/20us; 内阻 12Ω		5.6		V
Junction Capacitance	C_J	V_R=0V; f=1MHz		0.10	0.20	pF

Table-4 Electrical Characteristics

Symbol	Parameters
V_{RWM}	Reverse stand-off voltage
I_R	Reverse leakage current
V_{BR}	Reverse breakdown voltage
I_{BR}	Reverse breakdown current
V_{CL}	Clamping voltage
V_{TRIG}	Reverse trigger voltage
I_{TRIG}	Reverse trigger current
V_{HOLD}	Reverse holding voltage
I_{HOLD}	Reverse holding current
I_{PP}	Peak pulse current

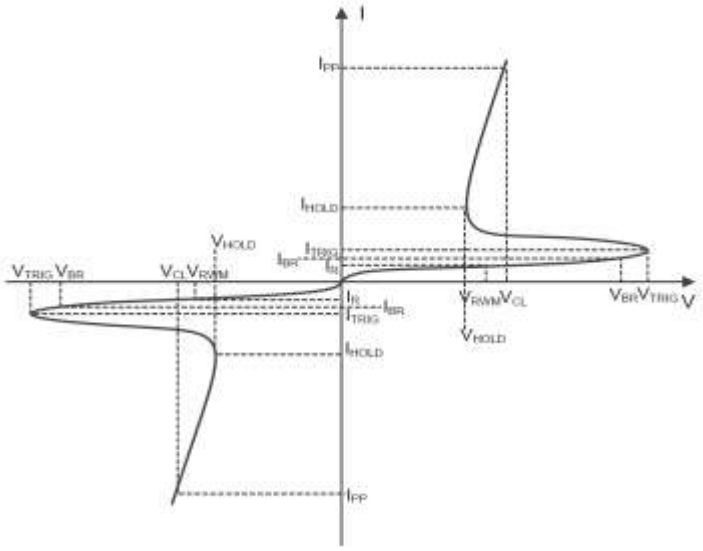

7. Typical Characteristic

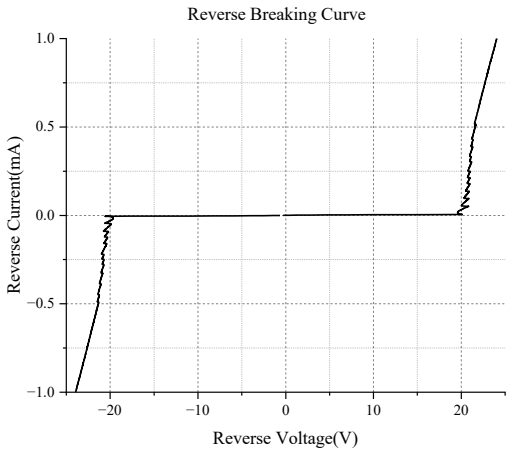

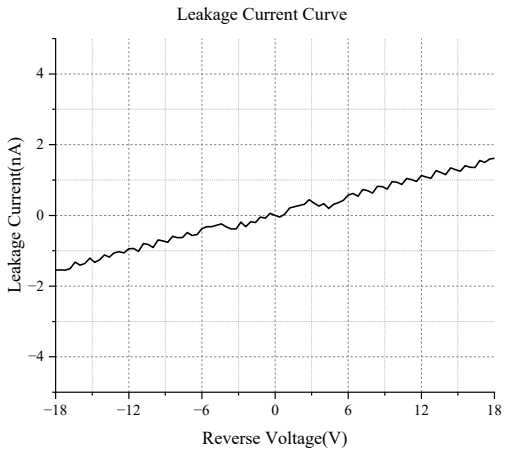

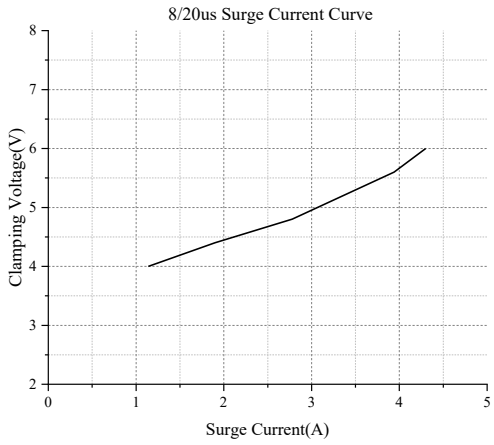

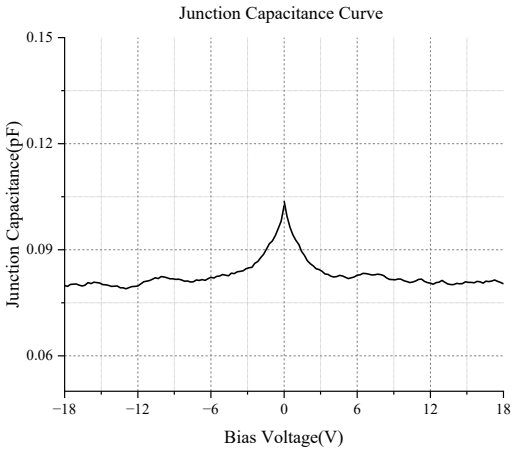

Measurement Wave According to IEC Standard

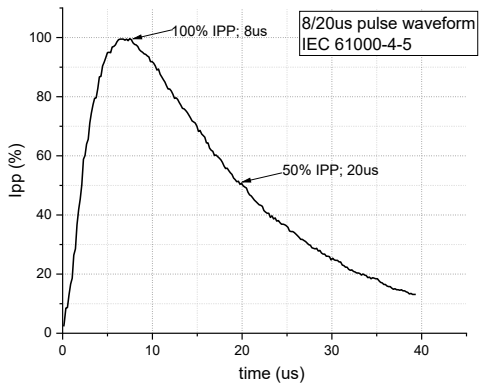

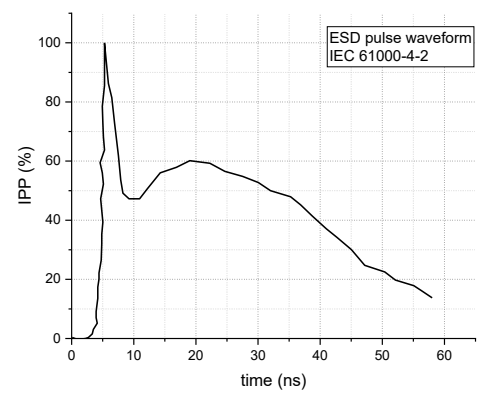

8. Dimension

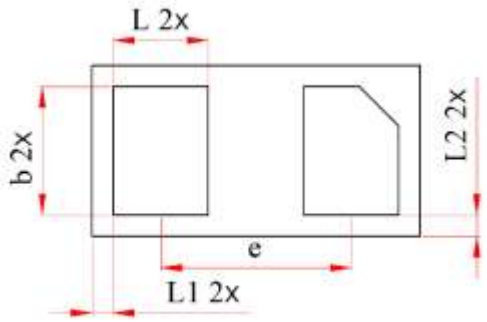

Bottom View

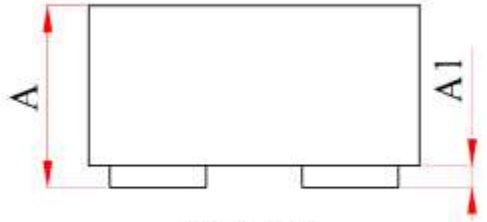

Side View

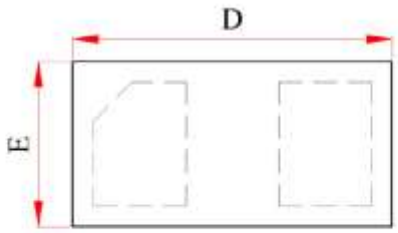

Top View

Symbol	Dimension In Millimeters			Dimension In Inches		
	Normal	Min	Max	Normal	Min	Max
A	--	0.280	0.340	--	0.011	0.013
A1	--	--	0.050	--	--	0.002
D	0.620	0.590	0.640	0.024	0.023	0.025
E	0.320	0.290	0.340	0.013	0.011	0.013
b	0.240	0.215	0.265	0.009	0.008	0.010
L	0.180	0.155	0.205	0.007	0.006	0.008
L1	0.040 REF			0.002 REF		
L2	0.040 REF			0.002 REF		
e	0.360 BSC			0.014 BSC		

9. Recommended Soldering Footprint

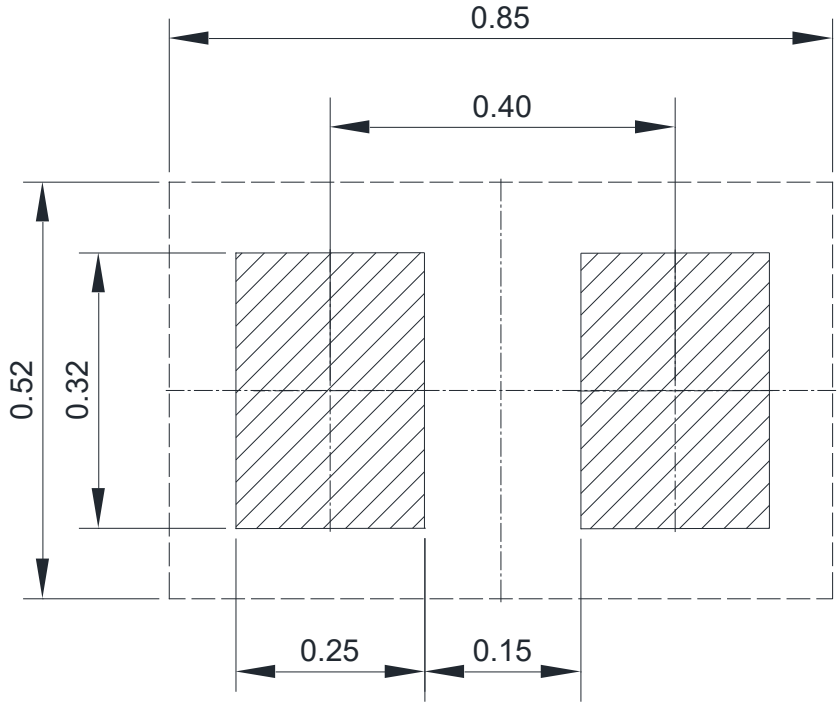

DIMENSIONS: MILLIMETERS

Copyright© ElecSuper Incorporated

DISCLAIMER

ELECSUPER PROVIDES TECHNICAL AND RELIABILITY DATA (INCLUDING DATASHEETS), DESIGN RESOURCES (INCLUDING REFERENCE DESIGNS), APPLICATION OR OTHER DESIGN ADVICE, SAFETY INFORMATION, AND OTHER RESOURCES “AS IS” AND WITH ALL FAULTS, AND DISCLAIMS ALL WARRANTIES, EXPRESS AND IMPLIED, INCLUDING WITHOUT LIMITATION ANY IMPLIED WARRANTIES OF MERCHANTABILITY, FITNESS FOR A PARTICULAR PURPOSE OR NON-INFRINGEMENT OF THIRD PARTY INTELLECTUAL PROPERTY RIGHTS.

These resources are intended for skilled developers designing with ElecSuper products. You are solely responsible for
(1) selecting the appropriate ElecSuper products for your application;
(2) designing, validating and testing your application;
(3) ensuring your application meets applicable standards, and any other safety, security, or other requirements.
These resources are subject to change without notice. ElecSuper grants you permission to use these resources only for development of an application that uses the ElecSuper products described in the resource. Other reproduction and display of these resources are prohibited. No license is granted to any other ElecSuper intellectual property right or to any third party intellectual property right. ElecSuper disclaims responsibility for, and you will fully indemnify ElecSuper and its representatives against, any claims, damages, costs, losses, and liabilities arising out of your use of these resources. ElecSuper’s products are provided subject to ElecSuper’s Terms of Sale or other applicable terms available either on www.elecsuper.com or provided in conjunction with such ElecSuper products. ElecSuper’s provision of these resources does not expand or otherwise alter ElecSuper’s applicable warranties or warranty disclaimers for ElecSuper products.

Copyright© ElecSuper Incorporated