This document contains proprietary information and such informationmay not be disclosed to others for any purposes,
not used for sales/marketing/procurement purposes without written permission

| REV | DESCRIPTION OF REVISION | ECN NO. | BY | DATE | APPROVED |
|---|---|---|---|---|---|
| A | Initial Release | ——— | H. wei | 1/9/15 | 1/9/15 |

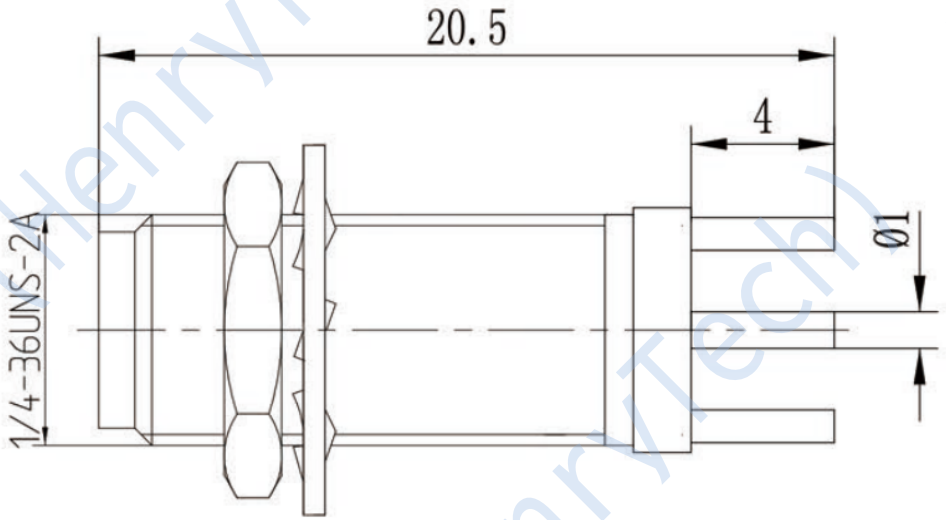


## 1 Electrical characteristics

1.1 Impedance: 50Ω
1.2 Working voltage: ≤335V
1.3 Insulation resistance: ≥5000MΩ
1.4 Dielectric strength: 1000V
1.5 Center Contact resistance≤ 3MΩ
1.6 Outer Contact resistance≤ 3MΩ
1.7 Frequency: DC~6GHz

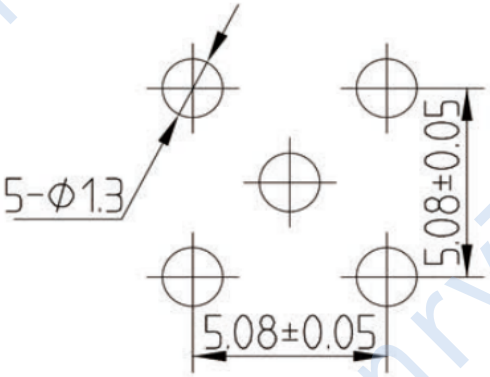


## 2 Material&Finish

2.1 Inner Contact: gold plated over Bronze
2.2 Outer Contact: gold plated over brass.
2.3 Insulators: Teflon

Notes:

1. ALL SPECIFICATIONS ARE SUBJECT TO CHANGE NOTICE AT ANY TIME
2. CUSTOMER OUTLINE DRAWING FOR REFERENCE ONLY

| | | | |
|---|---|---|---|
| DRAWN: H. wei 1/9/15 | TITLE: RF Coaxial Connector SMA Female Conn. For PCB | HenryTech | |
| ENGINEER: L. yu 1/9/15 | | DIMENSION IN MILLIMETERS (mm) | |
| APPROVED: W. yi 1/9/15 | | | |
| TOLERANCES UNLESS OTHERWISE SPEFICIED: X ±0.50, .X ±0.20, .XX ±0.10, ANGLES ±1° | PART NO: HL-SMA-KYHD3 | SIZE: A4 / SCALE: N/A / SHEET: 1/1 / REV: A | |