MBR2040PT-MBR20200PT

Features:

- ☐ Low power loss, high efficiency.
  High surge capacity
- ☐ For use in low voltage, high frequency inverters,
  free wheeling, and polarity protection applications.
- ☐ Metal silicon junction, majority carrier conduction.
- ☐ High current Capability, low forward voltage drop.
- ☐ Guard ring for over voltage protection.

RoHS COMPLIANT

TO-3P(TO-247AD)

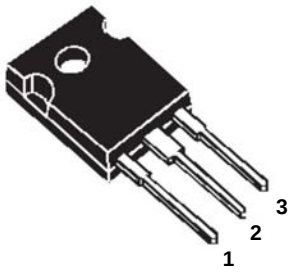



1.Anode 2.Cathode 3. Anode

Absolute Maximum Ratings (Ta=25℃ unless otherwise noted)

Parameter		Symbol	MBR 2040 PT	MBR 2045 PT	MBR 2050 PT	MBR 2060 PT	MBR 2080 PT	MBR 2090 PT	MBR 20100 PT	MBR 20150 PT	MBR 20200 PT	Unit
Maximum Recurrent Peak Reverse Voltage		V_{RRM}	40	45	50	60	80	90	100	150	200	V
Maximum RMS Voltage		V_{RMS}	28	31.5	35	42	56	63	70	105	140	
Maximum DC Blocking Voltage		$V_{R(DC)}$	40	45	50	60	80	90	100	150	200	
Maximum Average Forward Current		$I_{F(AV)}$	20									A
Peak Forward Surge Current:8.3ms single half sine-wave superimposed on rated load (JEDEC method)		I_{FSM}	275									
Maximum Forward Voltage at 10A per leg		V_F	0.68		0.72		0.82			0.92		V
Maximum DC Reverse Current at Rated DC Blocking Voltage	Tj=25℃	I_R	0.1									mA
	Tj=125℃		20									
Maximum Operating Junction Temperature		T_j	150				175					℃
Storage Temperature		T_{stg}	-55~+150				-65~+175					
Typical Thermal Resistance		$R_{\theta JC}$	1.4									℃/W

KTP Semiconductor

Typical Characteristics

RATING AND CHARACTERISTIC CURVES

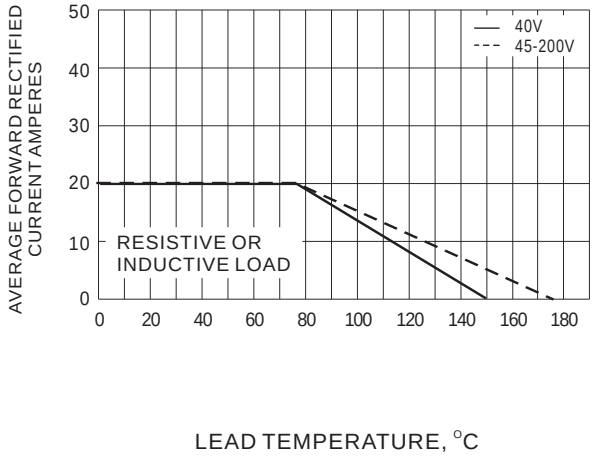

Fig.1- FORWARD CURRENT DERATING CURVE

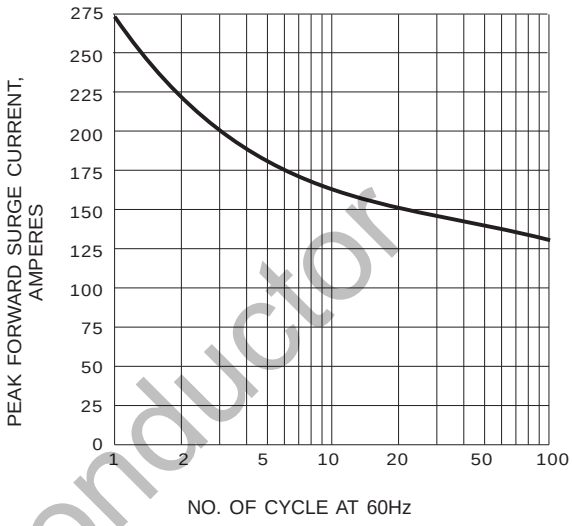

Fig.2- MAXIMUM NON-REPETITIVE SURGE CURRENT

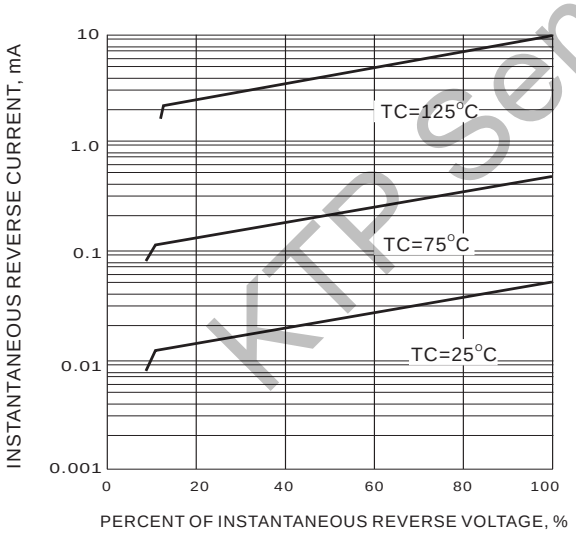

Fig.3- TYPICAL REVERSE CHARACTERISTIC

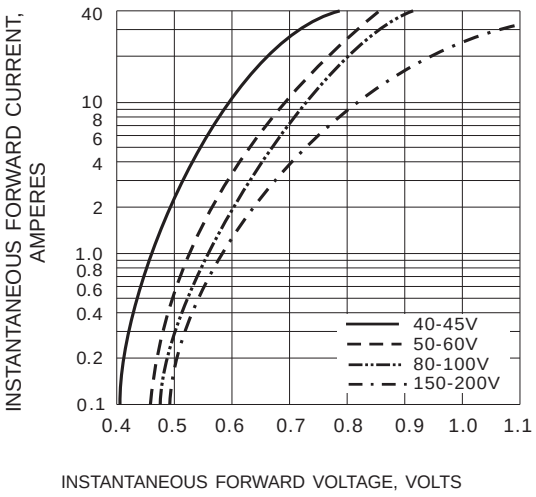

Fig.4- TYPICAL INSTANTANEOUS FORWARD CHARACTERISTIC

KTP Semiconductor

Package Dimension

TO-247

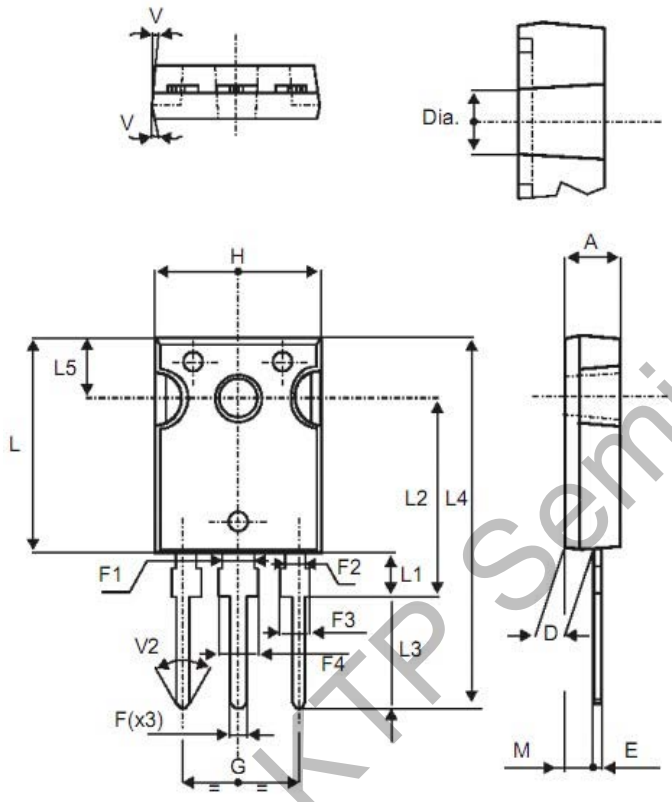

REF.	DIMENSIONS					
	Millimeters			Inches		
	Min.	Typ.	Max.	Min.	Typ.	Max.
A	4.85		5.15	0.191		0.203
D	2.20		2.60	0.086		0.102
E	0.40		0.80	0.015		0.031
F	1.00		1.40	0.039		0.055
F1		3.00			0.118	
F2		2.00			0.078	
F3	2.00		2.40	0.078		0.094
F4	3.00		3.40	0.118		0.133
G		10.90			0.429	
H	15.45		15.75	0.608		0.620
L	19.85		20.15	0.781		0.793
L1	3.70		4.30	0.145		0.169
L2		18.50			0.728	
L3	14.20		14.80	0.559		0.582
L4		34.60			1.362	
L5		5.50			0.216	
M	2.00		3.00	0.078		0.118
V		5°			5°	
V2		60°			60°	
Dia.	3.55		3.65	0.139		0.143

KTP Semiconductor