REV	ECN No.	DATE	REMARK
A	NEW	2024.10.10	NEW RELEASE

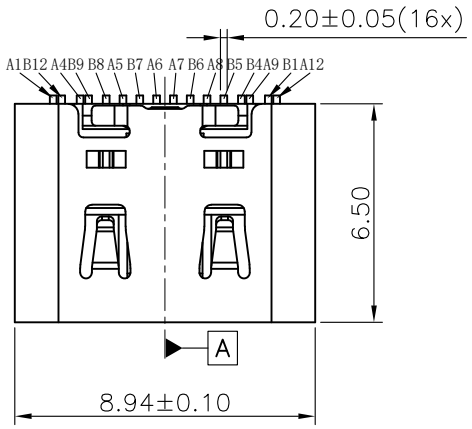

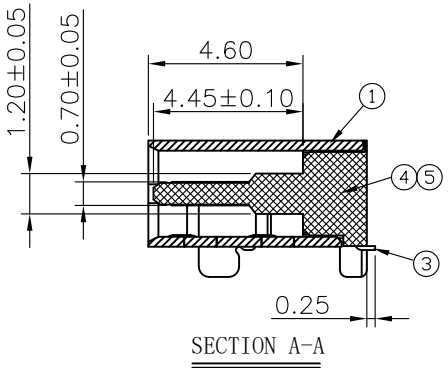

SECTION A-A

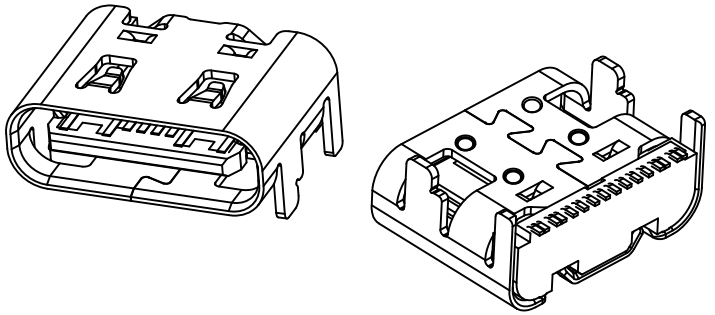

3D VIEW

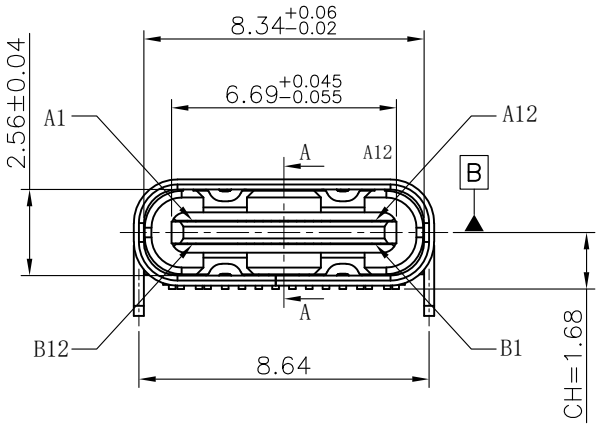

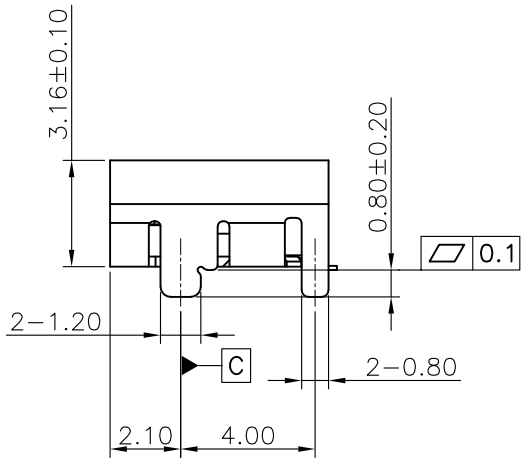

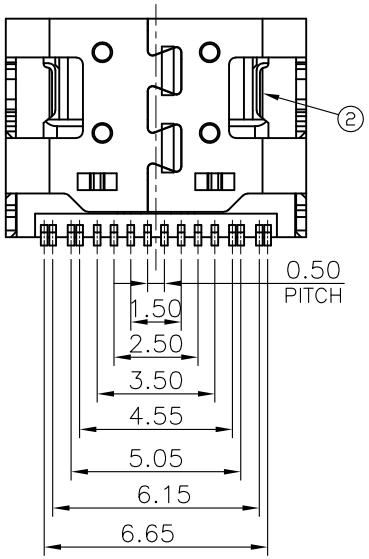

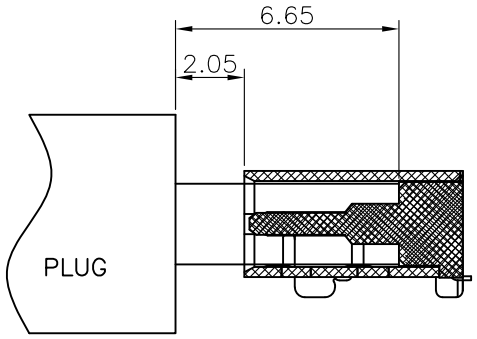

AFTER MATING

TABLE:

NO	PART	Q'TY	Material
1	SHELL	1	STAINLESS STEEL 304, NI 30u" MIN PLATED
2	Mid Plate	1	STAINIESS STEEL 301, NO PLATED
3	CONTACT	16	COPPER STEEL C18400,Au 3u"Plated On Vontact Area GF Plated On Solder Area;Nickel 50u"Min Underplating Over All.
4	1MD HOUSING	1	LCP/PA9T BLACK UL94 V-0
5	2MD HOUSING	1	LCP/PA9T BLACK UL94 V-0

GENERAL TOLERANCES (UNLESS SPECIFIED)		DRAWN BY: HuangXiaoHao	Date: 2024.01.25	深圳市中科兴达科技有限公司 Shenzhen Zhongke Xingda Technological Co;Ltd.	
X.XXX	±0.10	CHECKED BY: liuzongliang	Date: 2024.01.25	TITLE: USB TYPE-C Female 16Pin Top-Mount L=6.5 CH=1.68 Outer Shell With Shrapnel	
X.XX	±0.25				
X.X	±0.30	APPROVED BY: Jacky	Date: 2024.01.25	PART NO. CF266-16CB12R-02	DWG NO. CF266-16-02
ANGULAR	±3°				
THIRD ANGLE PROJECTION		UNT mm	SCALE 1:1	DRAWING A4	SHEET NO. 1 OF 3 / REV. A

REV	ECN No.	DATE	REMARK
A	NEW	2024.10.10	NEW RELEASE

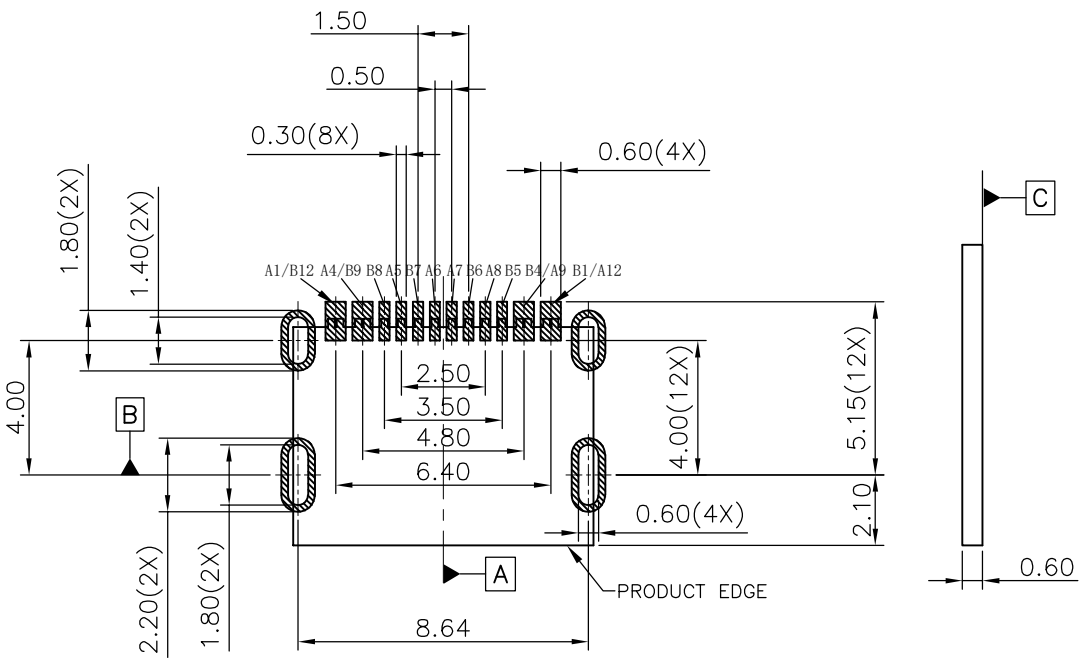

RECOMMENDED PCB LAYOUT(TOP VIEW)
THICKNESS 0.60MM;DEFAULT TOLERANCE:±0.05

NOTE:
1.ELECTRICAL PERFORMANCE,
1−1. CURRENT RATING:5 AMPS. FOR TOTAL VBUS/GND PINS;
1.25AMPS FOR CC PIN,
0.25 AMPS. FOR ALL OTHER CONTACT.
1−2. VOLTAGE RATING:20V DC/AC (RMS. MAX)
1−3. LLCR:.
VBUS & GND PINS AND OTHER PINS: 40MΩ/PIN MAX.
SHIELD:50MΩ/MAX.
LLCR MAX. CHANGE OF ALL PINS: 10MΩ.
1−4.INSULATION RESISTANCE: 100MΩ MIN
1−5.DIELECTRIC WITHSTAND VOLTAGE,AC 100V FOR 1 MINUTE.
2.MECHANICAL PERFORMANCE,
2−1.INSERTION FORCE: 5~20N.
2−2.EXTRACTION FORCE: 8~20N.
2−3.DURABILITY: 10000 CYCLES.
3.ENVIRONMENTAL PERFORMANCE:
OPERATING TEMPERATURE: −25°C~+85°C.
4.IR REFLOW:
THE PEAK TEMPERATURE ON THE BOARD SHALL BE MAINTAINED FOR 10 SECONDS AT 260°C.
5.COMPLIANCE WITH ROHS REQUIREMENTS.
6.SALT SPRAY:48H
7.TID No.11012

PART NUMBER CODE:
CF266−16 X B 12 R − 02
1 2 3
1.HOUSING MATERIAL:
L:LCP
C:PA9T
2.HOUSING COLOR:
B:BLACK
3.CONTACTS PLATED:
12:CONTACT AREA: AU 3U''SOLDER TAILS:GF

USB Type−C Pin Assignments

Pin Number	Signal Name	Pin Number	Signal Name
A1	GND	B12	GND
A2	−−−	B11	−−−
A3	−−−	B10	−−−
A4	VBUS	B9	VBUS
A5	CC1	B8	SBU2
A6	Dp1	B7	Dn2
A7	Dn1	B6	Dp2
A8	SBU1	B5	CC2
A9	VBUS	B4	VBUS
A10	−−−	B3	−−−
A11	−−−	B2	−−−
A12	GND	B1	GND

GENERAL TOLERANCES (UNLESS SPECIFIED)		DRAWN BY: HuangXiaoHao	Date: 2024.01.25	深圳市中科兴达科技有限公司 Shenzhen Zhongke Xingda Technological Co;Ltd.	
X.XXX	±0.10	CHECKED BY: liuzongliang	Date: 2024.01.25	TITLE: USB TYPE−C Female 16Pin Top−Mount L=6.5 CH=1.68 Outer Shell With Shrapnel	
X.XX	±0.25				
X.X	±0.30	APPROVED BY: Jacky	Date: 2024.01.25	PART NO. CF266−16CB12R−02	DWG NO. CF266−16−02
ANGULAR	±3°				
THIRD ANGLE PROJECTION		UNT mm	SCALE 1:1	DRAWING A4	SHEET NO. 2 OF 3	REV. A

REV	ECN No.	DATE	REMARK
A	NEW	2024.10.10	NEW RELEASE

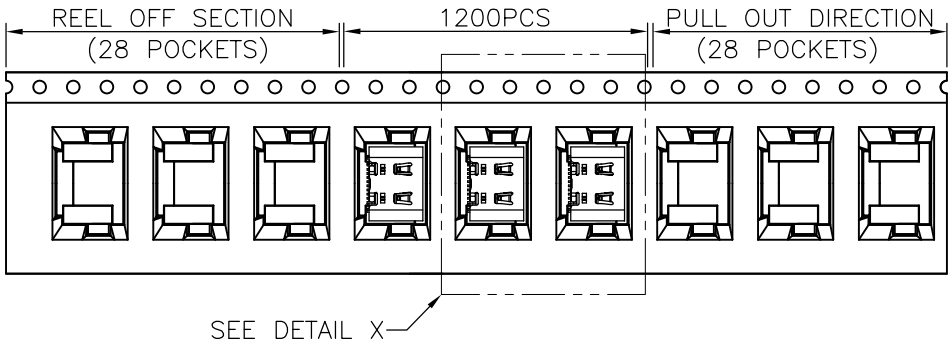

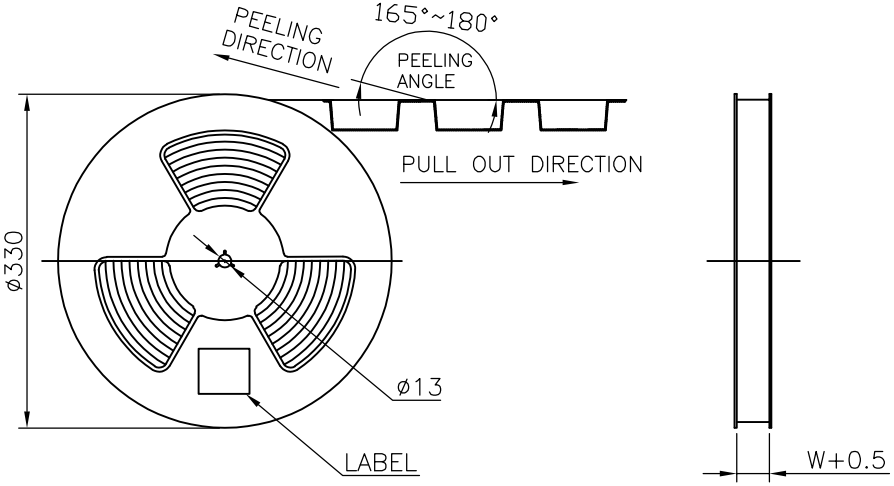

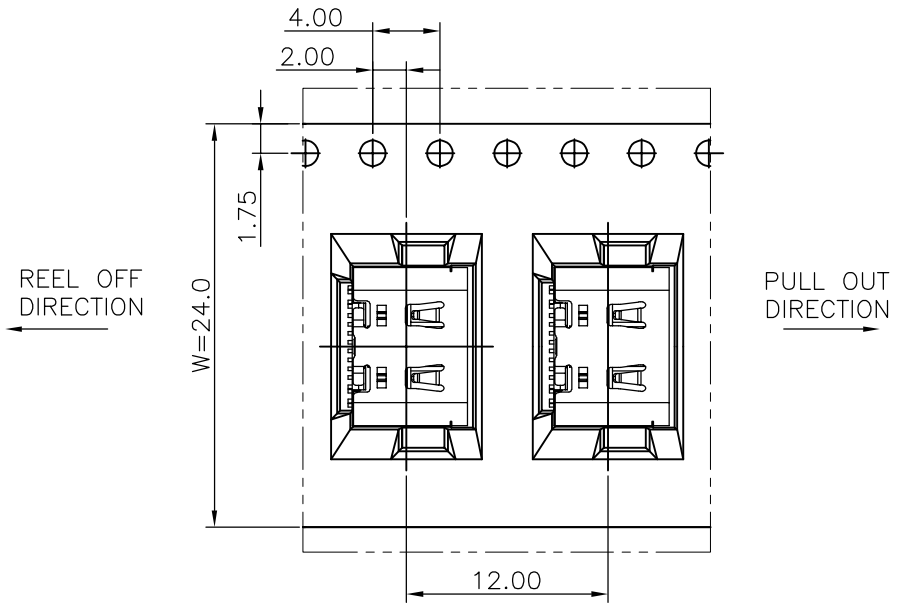

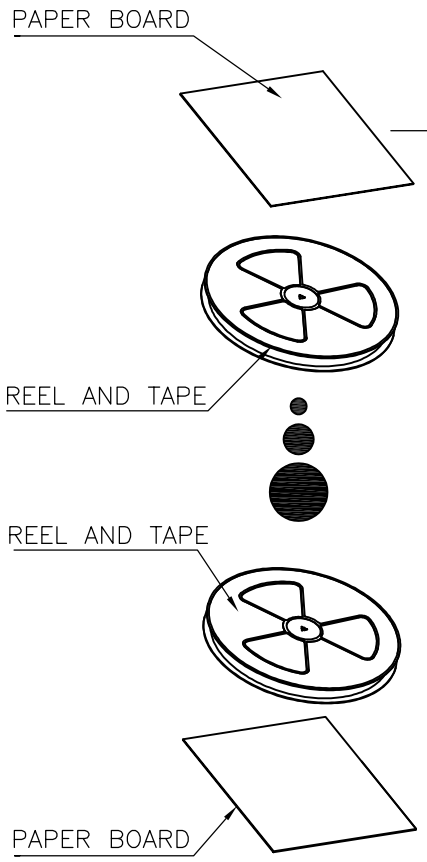

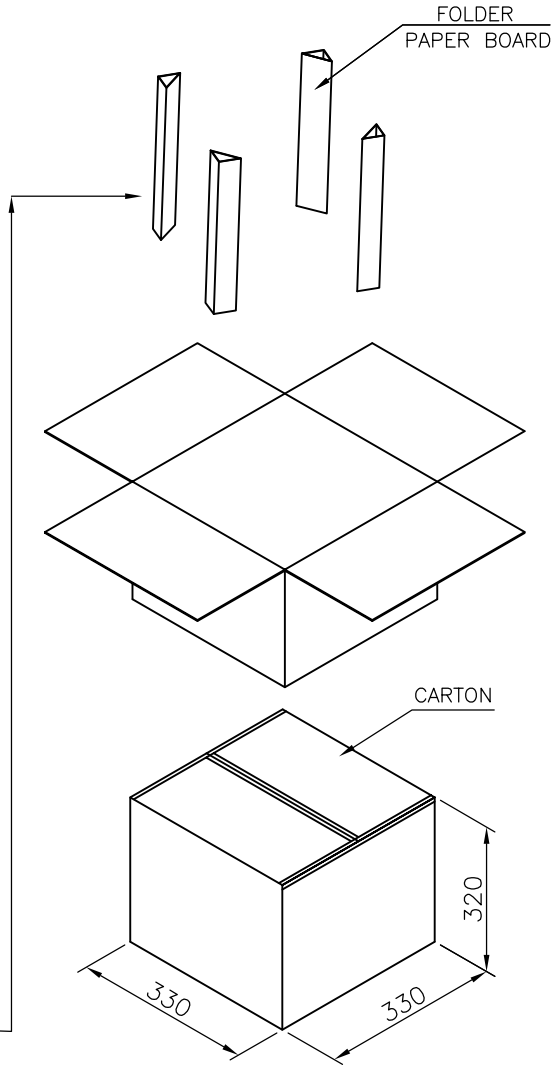

	REEL	CARTON
CONNECTOR (PCS)	1200	12000

GENERAL TOLERANCES (UNLESS SPECIFIED)		DRAWN BY: HuangXiaoHao	Date: 2024.01.25	深圳市中科兴达科技有限公司 Shenzhen Zhongke Xingda Technological Co;Ltd.	
X.XXX	±0.10	CHECKED BY: liuzongliang	Date: 2024.01.25	TITLE: USB TYPE-C Female 16Pin Top-Mount L=6.5 CH=1.68 Outer Shell With Shrapnel	
X.XX	±0.25				
X.X	±0.30	APPROVED BY: Jacky	Date: 2024.01.25	PART NO. CF266-16CB12R-02	DWG NO. CF266-16-02
ANGULAR	±3°				
THIRD ANGLE PROJECTION		UNT mm	SCALE 1:1	DRAWING A4	SHEET NO. 3 OF 3 / REV. A