REV	ECN No.	DATE	REMARK
A	NEW	2019.11.20	NEW RELEASE
B	ECN202105002	2021.05.06	增加真空包装料号规格

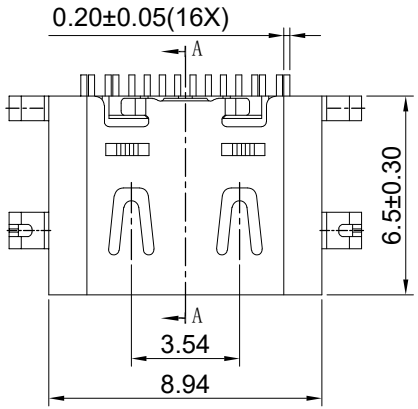

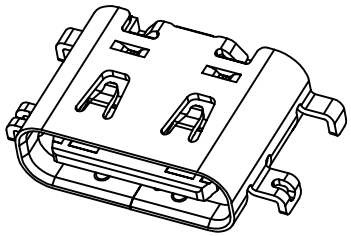

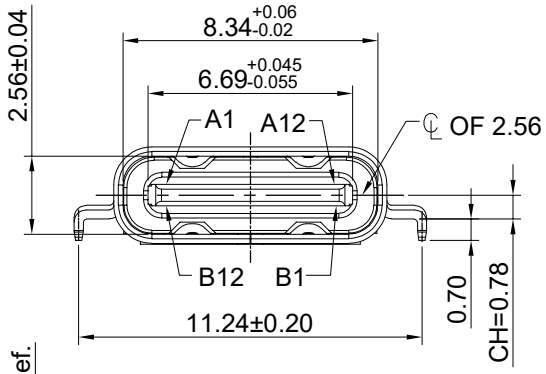

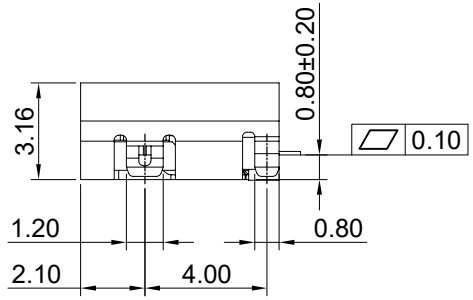

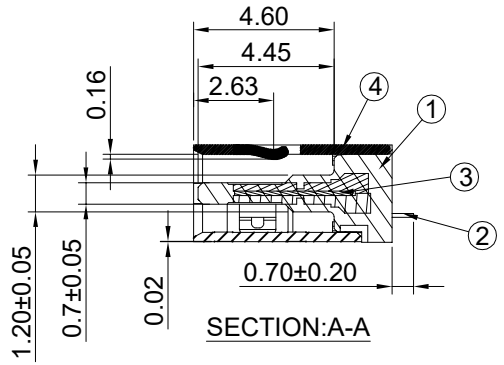

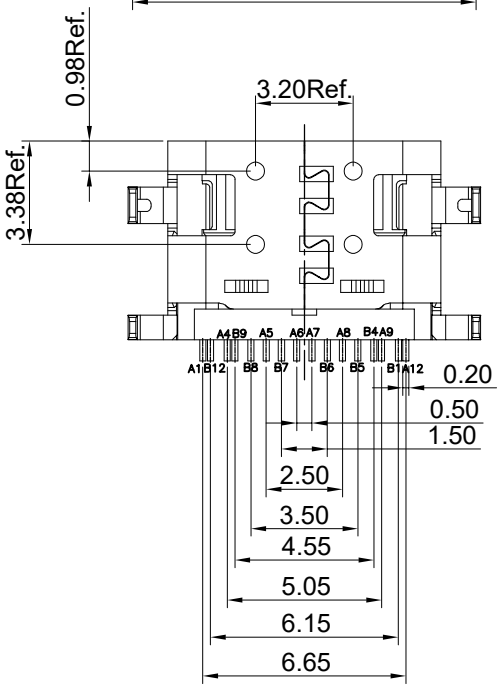

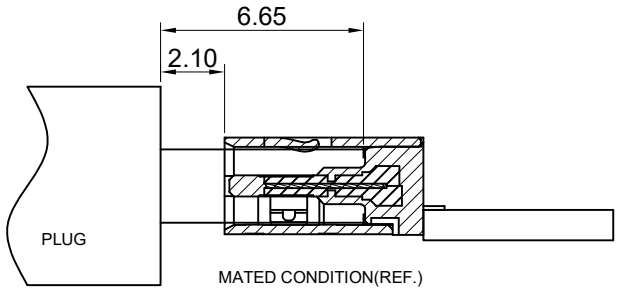

TYPE:

NO.	DESCRIPTION	MATERIAL	REMARKS	QTY
4	SHELL	SUS304 1/2H T=0.30mm	NICKEL 30u" MIN PLATING	1PCS
3	SHIELDING PLATE	SUS301 3/4H T=0.15mm	---	1PCS
2	CONTACT	C18400-H T=0.12mm	Au 3u"PLATED ON THE FUNCTIONAL AREA OF CONTACT. PLATING G/F OF THE SOLDER AREA Ni 50u" MIN. UNDER PLATED OVER ALL.	2SET
1	HOUSING	PA9T/LCP UL94V-0	BLACK/BLUE	1PCS

GENERAL TOLERANCES (UNLESS SPECIFIED)		DRAWN BY: HuangXiaoHao	Date: 2021.05.06	深圳市中科兴达科技有限公司 Shenzhen Zhongke Xingda Technological Co;Ltd.	
X.XXX	±0.10	CHECKED BY: liuzongliang	Date: 2021.05.06	TITLE: USB CF 16PIN (L=6.5) 沉板0.8外壳带弹片款	
X.XX	±0.25				
X.X	±0.30	APPROVED BY: Jacky	Date: 2021.05.06	PART NO. CF172-16SCB12R-68	DWG NO. CF172-16-68
ANGULAR	±3°				
THIRD ANGLE PROJECTION		UNT mm	SCALE 1:1	DRAWING A4	SHEET NO. 1 OF 3	REV. B

REV	ECN No.	DATE	REMARK
A	NEW	2019.11.20	NEW RELEASE
B	ECN202105002	2021.05.06	增加真空包装料号规格

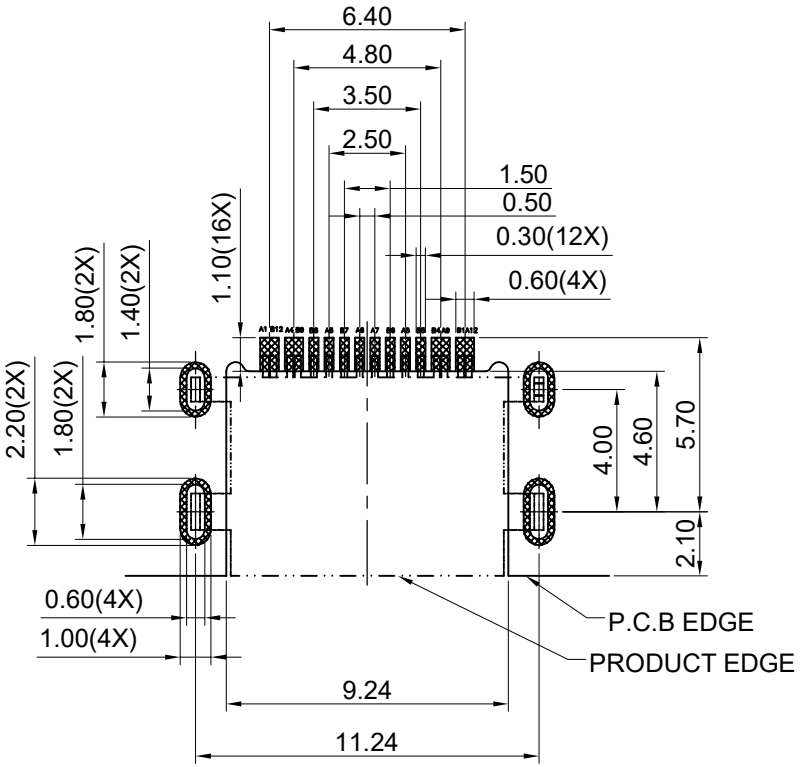

RECOMMENDED PCB LAYOUT(TOP VIEW)
THICKNESS 0.80MM;DEFAULT TOLERANCE:±0.05

USB Type-C Pin Assignments

Pin Number	Signal Name	Pin Number	Signal Name
A1	GND	B12	GND
A2	----	B11	----
A3	----	B10	----
A4	VBUS	B9	VBUS
A5	CC1	B8	SBU2
A6	Dp1	B7	Dn2
A7	Dn1	B6	Dp2
A8	SBU1	B5	CC2
A9	VBUS	B4	VBUS
A10	----	B3	----
A11	----	B2	----
A12	GND	B1	GND

Specifications:
1.Electrical Performance,
1-1. Current Rating:5 Amps. For Total VBUS/GND Pins;
0.5Amps For CC Pin,
0.25 Amps. For All Other Contact.
1-2. Voltage Rating:20V DC/AC (Rms. Max)
1-3. Contact Resistance: 40mΩ Max Initial.
50mΩ Max After Test
1-4.Dielectric Withstanding Voltage: 100V AV
1-5.Insulation Resistance:100MΩ Min
2.Mechanical Performance,
2-1.Insertion Force: 5~20N.
2-2.Extraction Force: 8~20N.
2-3.Durability: 10000 Cycles.
3.Environmental Performance:
Operating Temperature: -25°C~+85°C.
4.IR Reflow:
The Peak Temperature On The Board Shall
Be Maintained For 10 Seconds At 260°C.
5.Salt Spray:48H

TID NO.	2754
IEC62680-1-3	24B01N000452-001-COM

Ordering Information:
C F172 - 16 S X X XX XX - 68
1 2 3 4
1.Housing Material:
C:PA9T
L:LCP
2.Housing Color:
B:black
L:Blue
3.Contacts Plated:
12:Contact Area: Au 3u",Solder Tails:GF
15:Contact Area: Au 30u",Solder Tails:GF
4.Packing Options:
R:Tape & Reel
VR:Tape & Teel+Vacuum Packaging (B)

GENERAL TOLERANCES (UNLESS SPECIFIED)		DRAWN BY: HuangXiaoHao	Date: 2021.05.06	深圳市中科兴达科技有限公司 Shenzhen Zhongke Xingda Technological Co;Ltd.	
X.XXX	±0.10	CHECKED BY: liuzongliang	Date: 2021.05.06	TITLE: USB CF 16PIN (L=6.5) 沉板0.8外壳带弹片款	
X.XX	±0.20				
X.X	±0.30	APPROVED BY: Jacky	Date: 2021.05.06	PART NO. CF172-16SCB12R-68	DWG NO. CF172-16-68
ANGULAR	±3°				
THIRD ANGLE PROJECTION		UNT mm	SCALE 1:1	DRAWING A4	SHEET NO. 2 OF 3	REV. B

REV	ECN No.	DATE	REMARK
A	NEW	2019.11.20	NEW RELEASE
B	ECN202105002	2021.05.06	增加真空包装料号规格

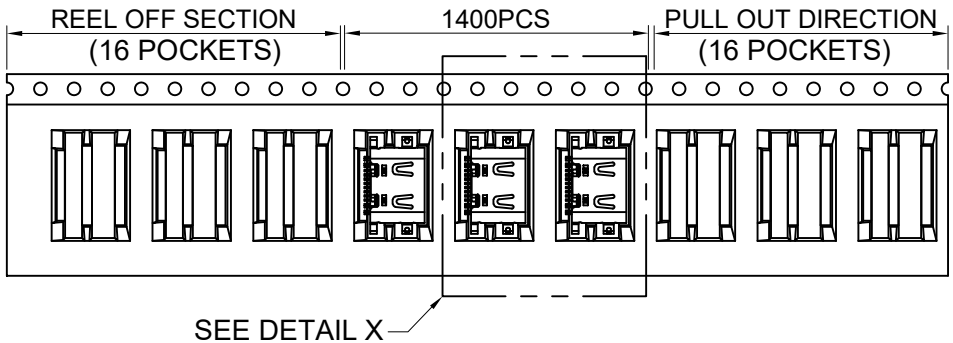

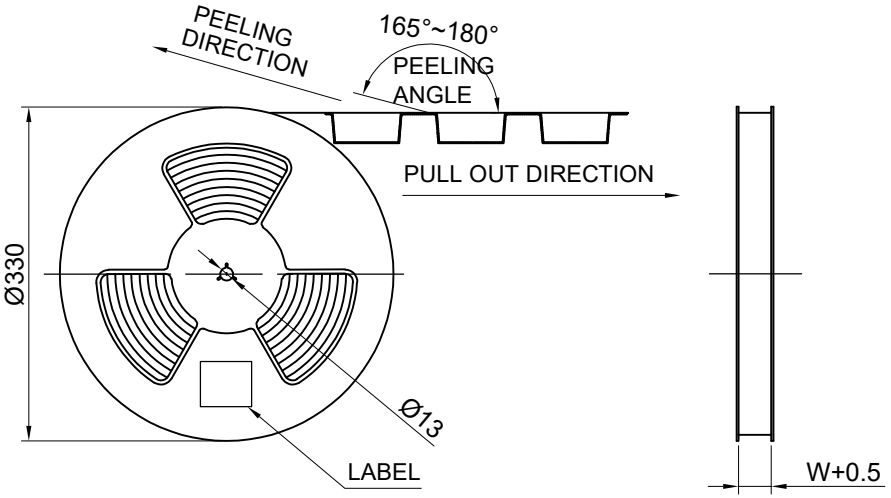

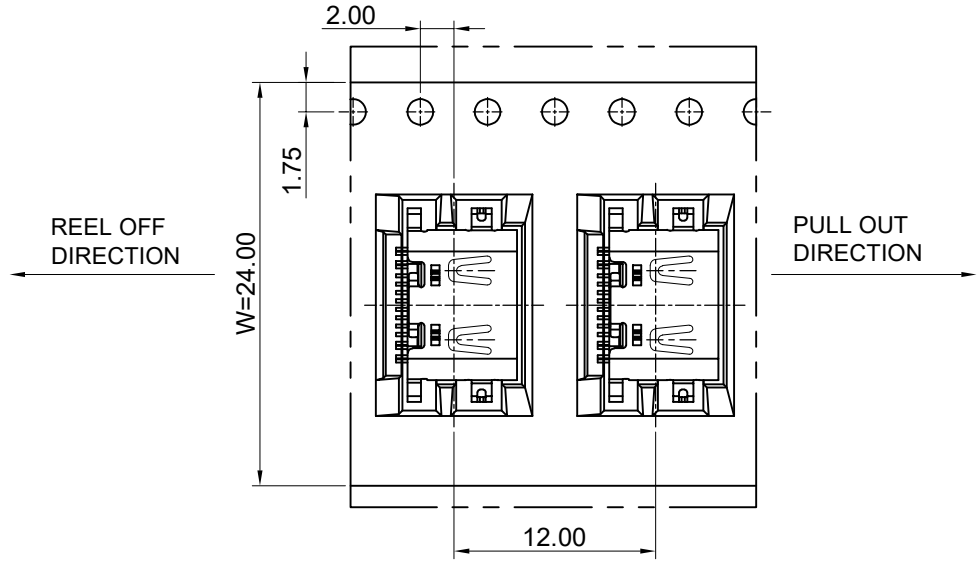

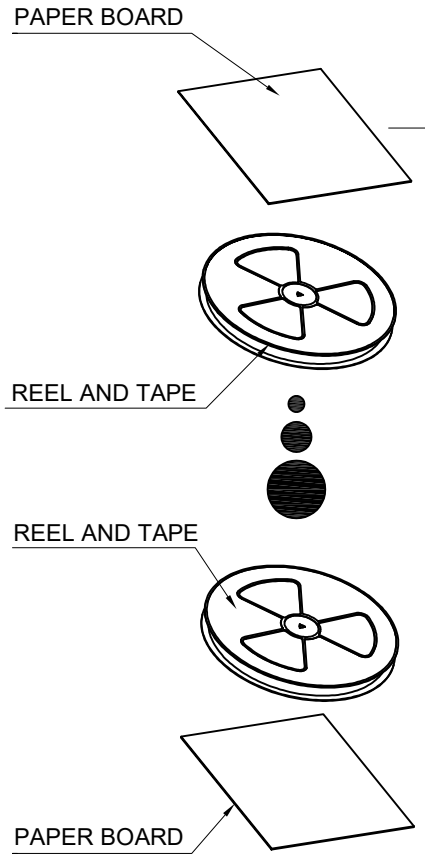

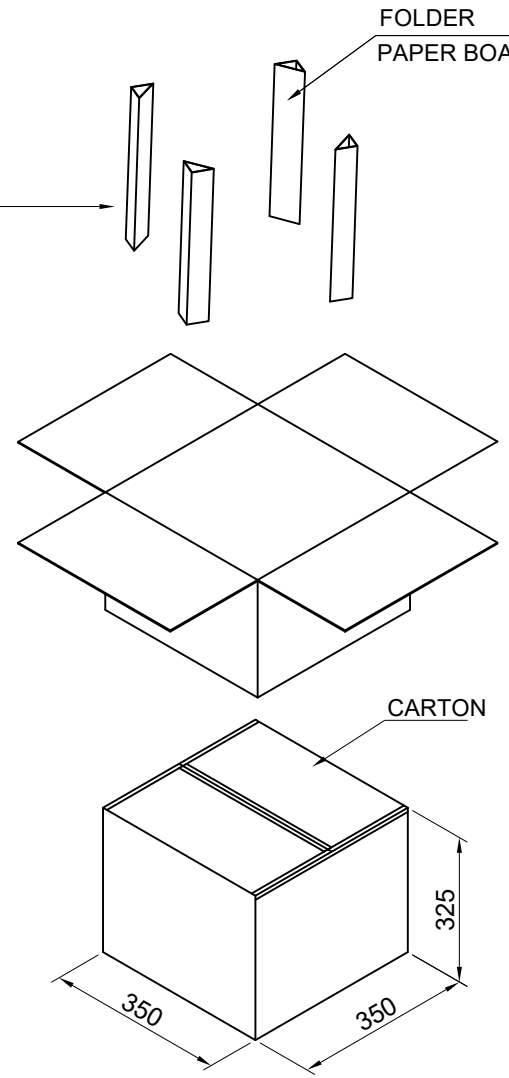

	REEL	CARTON
CONNECTOR (PCS)	1400	14000

GENERAL TOLERANCES (UNLESS SPECIFIED)		DRAWN BY: HuangXiaoHao	Date: 2021.05.06	深圳市中科兴达科技有限公司 Shenzhen Zhongke Xingda Technological Co;Ltd.	
X.XXX	±0.10	CHECKED BY: liuzongliang	Date: 2021.05.06	TITLE: USB CF 16PIN (L=6.5) 沉板0.8外壳带弹片款	
X.XX	±0.20				
X.X	±0.30	APPROVED BY: Jacky	Date: 2021.05.06	PART NO. CF172-16SCB12R-68	DWG NO. CF172-16-68
ANGULAR	±3°				
THIRD ANGLE PROJECTION		UNT mm	SCALE 1:1	DRAWING A4	SHEET NO. 3 OF 3 / REV. B