REV	ECN No.	DATE	REMARK
A	NEW	2022.10.25	NEW RELEASE
B	---	2023.08.14	变更新图框
C	---	2023.09.25	整理图纸
D	---	2024.09.16	依协会和IEC测试结果原电流3A改为5A

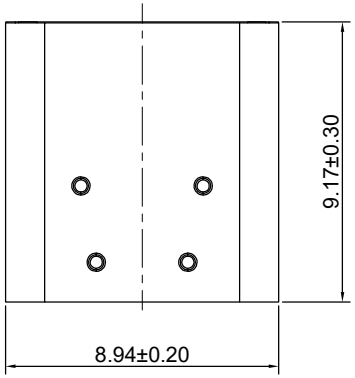

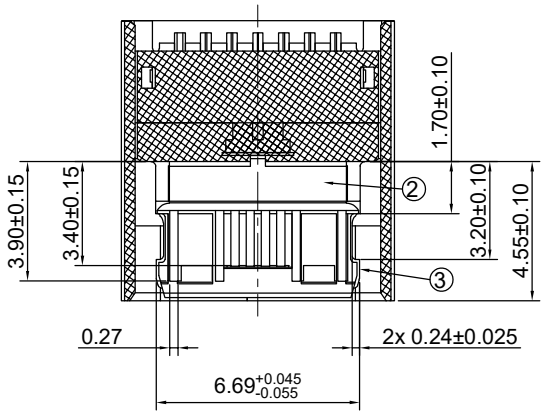

Section B-B

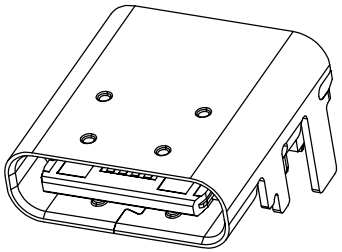

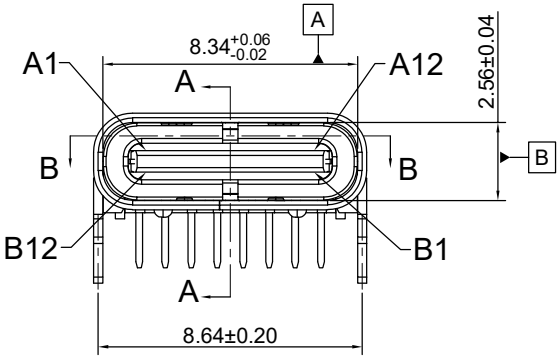

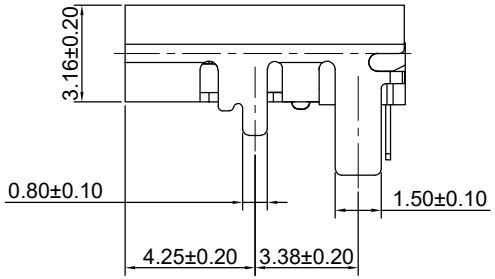

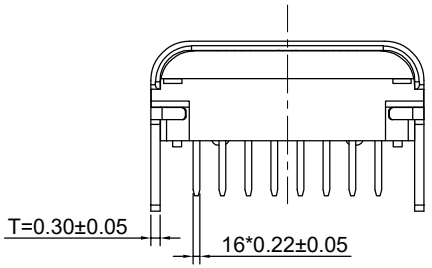

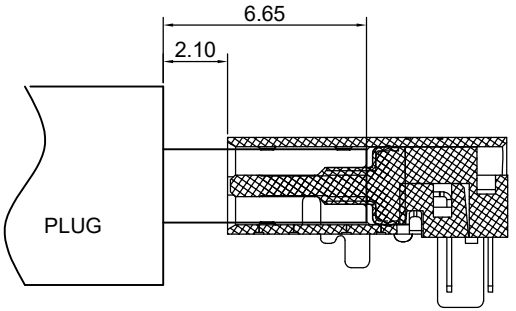

Mated Condition(REF.)

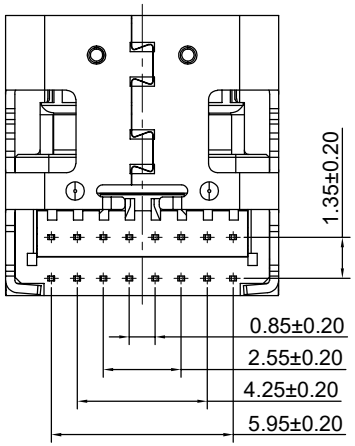

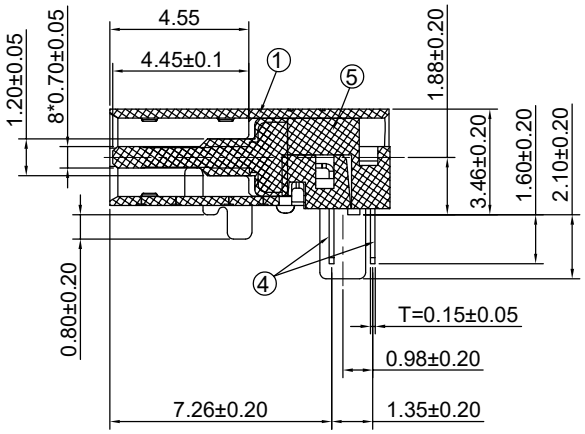

Section A-A

TABLE:

NO	PART	Q'TY	Material
1	SHELL	1	STAINLESS STEEL 304, 50U"MIN NICKEL PLATING
2	EMI Plate	1	STAINIESS STEEL 301,NI 30u" MIN PLATED(SEE THE PART NUMBER CODE:)
3	Mid Plate	1	STAINIESS STEEL 301, NO PLATED
4	CONTACT	16	Copper Steel C18400,Au(Part Number Code) Plated on Contact Area Matte Tin Plated 50u"Min(Or GF) on Solder Area;Nickel 50u"Min Underplating Over All.
5	HOUSING	1	LCP BLACK UL94 V-0

GENERAL TOLERANCES (UNLESS SPECIFIED)		DRAWN BY: HuangXiaoHao	Date: 2024.09.16	深圳市中科兴达科技有限公司 Shenzhen Zhongke Xingda Technological Co;Ltd.	
X.XXX	±0.10	CHECKED BY: liuzongliang	Date: 2024.09.16	TITLE: USB Type-C Receptacle 16PIN DIP CH1.88	
X.XX	±0.25				
X.X	±0.30	APPROVED BY: Jacky	Date: 2024.09.16	PART NO. CF216-016SLB11R-02	DWG NO. CF216-016-02
ANGULAR	±3°				
THIRD ANGLE PROJECTION		UNT mm	SCALE 1:1	DRAWING A4	SHEET NO. 1 OF 3	REV. D

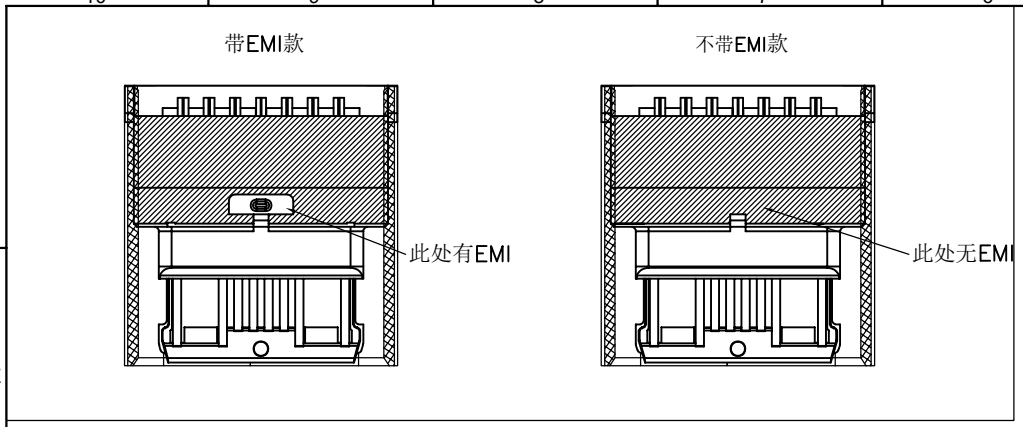

REV	ECN No.	DATE	REMARK
A	NEW	2022.10.25	NEW RELEASE
B	---	2023.08.14	变更新图框
C	---	2023.09.25	整理图纸
D	---	2024.09.16	依协会和IEC测试结果原电流3A改为5A

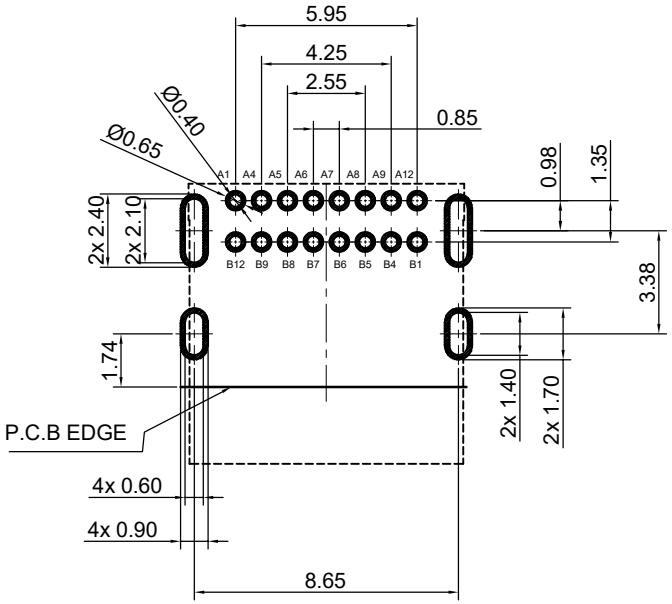

RECOMMENDED PCB LAYOUT(TOP)
TOLERANCES:±0.05MM

USB TYPE-C PIN ASSIGNMENTS

Pin	Signal	Mating Sequence
A1	GND	First
A4	VBUS	First
A5	CC1	Second
A6	Dp1	Second
A7	Dn1	Second
A8	SBU1	Second
A9	VBUS	First
A12	GND	First
SHELL		GND

Pin	Signal	Mating Sequence
B12	GND	First
B9	VBUS	First
B8	SBU2	Second
B7	Dn2	Second
B6	Dp2	Second
B5	CC2	Second
B4	VBUS	First
B1	GND	First
SHELL		GND

Specifcations:
1.0 Electrical performance:
1.1 Contact resistance: 40mΩ max for initial.
10mΩ change After test. Measure At 20mv, 100mA.
1.2 Dielectric Withstanding Voltage:AC 100V(rms).
1.3 Insulation Resistance:100MΩ min.
1.4 Contact Current Rating: 5A
1.5 Voltage: 20 Vac (rms).
2.0 Mechanical Performance:
2.1 Mating force:5~20N
2.2 Unmating force:8~20N Initial test,
6~20N After test
2.3 Durability:10,000 cycles.
3.0 Environmental performance:
3.1 Temperature range:
3.2 Operating temperature:-40°to+85°.
3.3 Storage temperature:-20°to+60°.

TID NO.	9891
IEC62680-1-3	24B01N001450-001-COM

Ordering Information:

CF 2(1) 16(2) - 016 S L X(3) XX(4) X(5) - X(6) - 02

1.Product Type:
2:Top-Mount
2.Pin No.:
16:16Pin
3.Housing Color:
B:Black
4.Contacts Plated:
11:Au1u" plated on contact area
GF on solder area;Nickel 50u"min underplating over all.
Au1u" plated on contact area
Matte Tin plated 50u"min on solder area;Nickel 50u"min underplating over all.
5.Packing Options:
R:Tape & Reel
6.With/Without EMI
(Blank):With EMI
1:Without EMI

GENERAL TOLERANCES (UNLESS SPECIFIED)		DRAWN BY: HuangXiaoHao	Date: 2024.09.16	深圳市中科兴达科技有限公司 Shenzhen Zhongke Xingda Technological Co;Ltd.	
X.XXX	±0.10	CHECKED BY: liuzongliang	Date: 2024.09.16	TITLE: USB Type-C Receptacle 16PIN DIP CH1.88	
X.XX	±0.25				
X.X	±0.30	APPROVED BY: Jacky	Date: 2024.09.16	PART NO. CF216-016SLB11R-02	DWG NO. CF216-016-02
ANGULAR	±3°				
THIRD ANGLE PROJECTION		UNT mm	SCALE 1:1	DRAWING A4	SHEET NO. 2 OF 3	REV. D

REV	ECN No.	DATE	REMARK
A	NEW	2022.10.25	NEW RELEASE
B	---	2023.08.14	变更新图框
C	---	2023.09.25	整理图纸
D	---	2024.09.16	依协会和IEC测试结果原电流3A改为5A

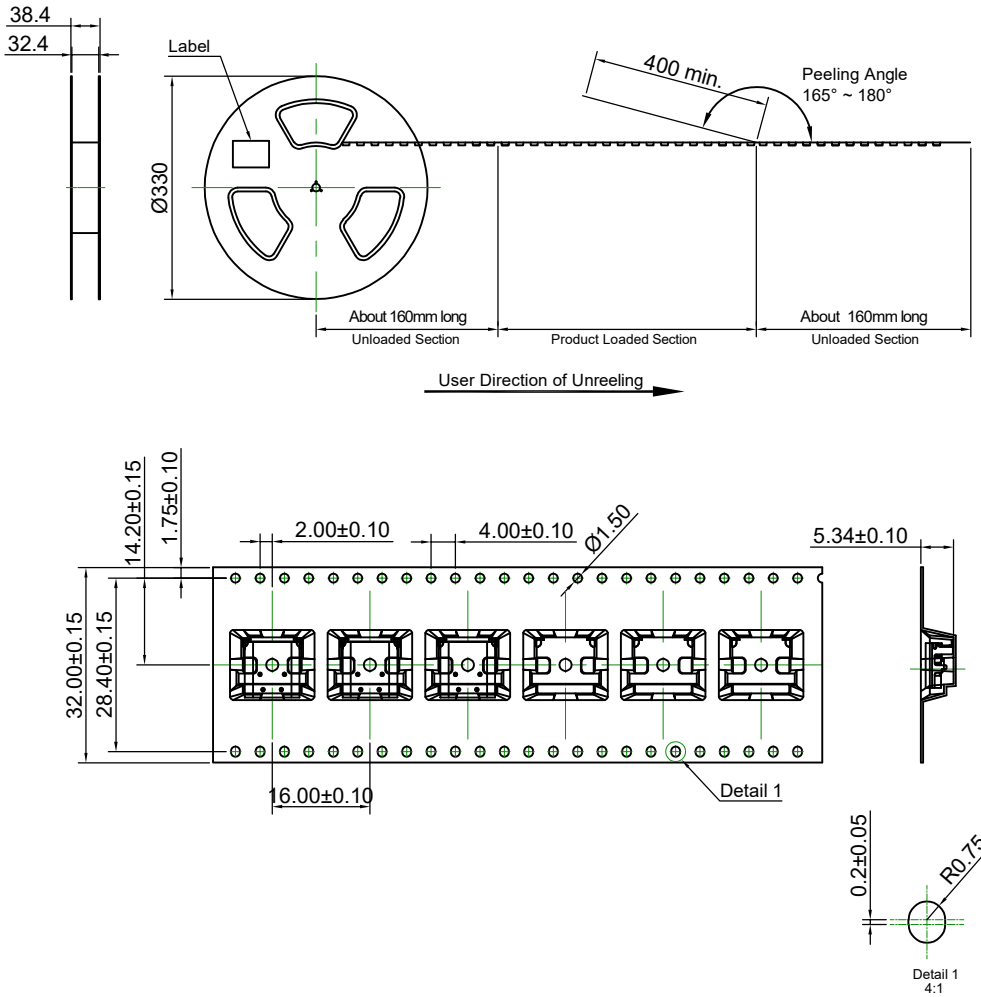

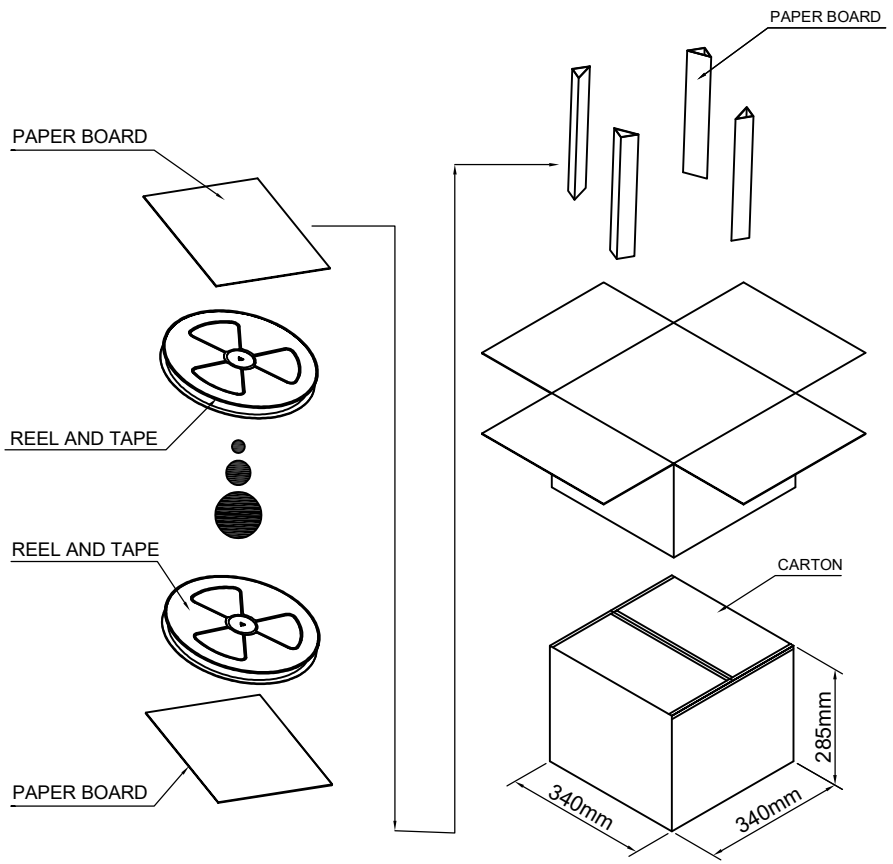

Pcs / Reel	Reels / Carton	Total Qualtity
700	7	4,900 pcs

备 注：

1. 内外箱材质：K=K
2. 每盘装700PCS,并贴上4PCS美纹胶,然后贴上对应的产品标签。
3. 外箱底部先垫一隔板,并在外箱四个内角各放置一个三角架，
把7卷(4900PCS)封装好的产品标签一律朝上平放进外箱中
上层盖上一隔板，再用封箱胶纸将纸箱口於“工”字型封好，
并贴上对应的产品标签。

GENERAL TOLERANCES (UNLESS SPECIFIED)		DRAWN BY: HuangXiaoHao	Date: 2024.09.16	深圳市中科兴达科技有限公司 Shenzhen Zhongke Xingda Technological Co;Ltd.	
X.XXX	±0.10	CHECKED BY: liuzongliang	Date: 2024.09.16	TITLE: USB Type-C Receptacle 16PIN DIP CH1.88	
X.XX	±0.25				
X.X	±0.30	APPROVED BY: Jacky	Date: 2024.09.16	PART NO. CF216-016SLB11R-02	DWG NO. CF216-016-02
ANGULAR	±3°				
THIRD ANGLE PROJECTION		UNT mm	SCALE 1:1	DRAWING A4	SHEET NO. 3 OF 3 / REV. D