REV	ECN No.	DATE	REMARK
A	NEW	2023.09.04	NEW RELEASE

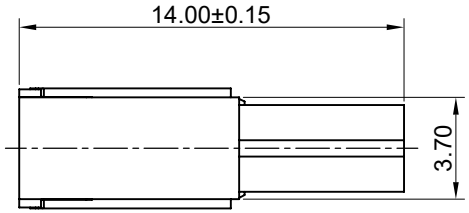

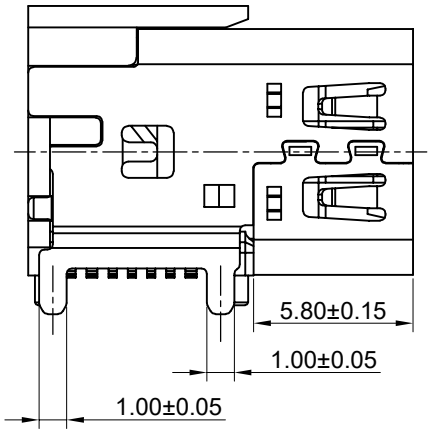

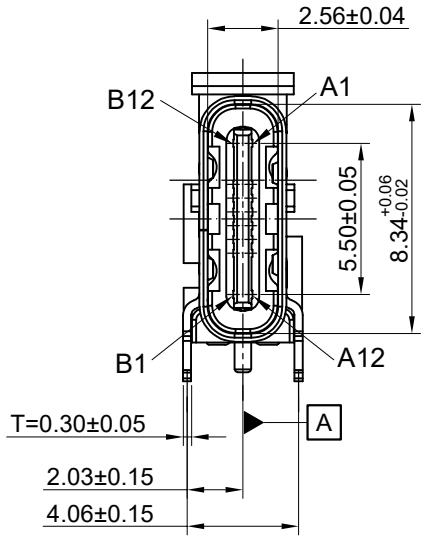

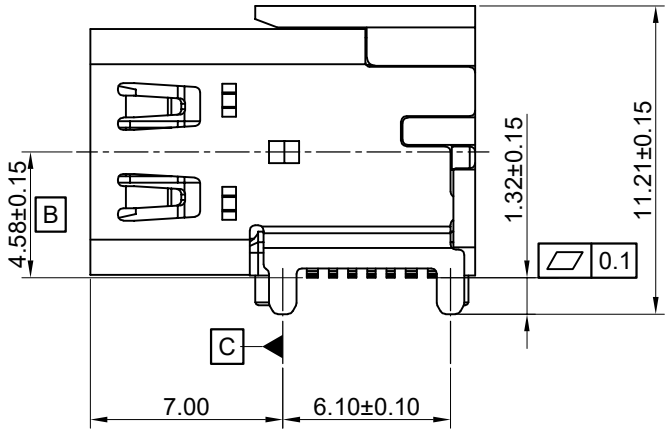

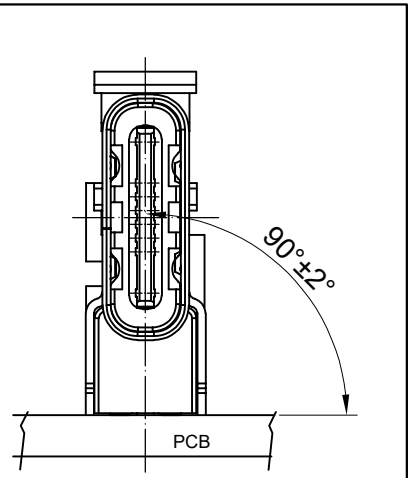

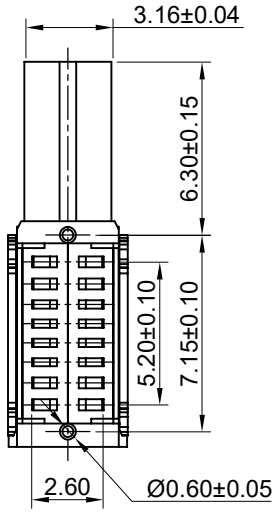

Table:

NO.	Description	QTY	Material	Remarks
4	Mid Plate	1PCS	Stainless Steel SUS301 T=0.15mm	---
3	Contact	16PCS	COPPER STEEL C7025 T=0.12mm	Au 1u"Plated On Vontact Area GF Plated On Solder Area; Nickel 50u"Min Under Plating Over All.
2	Shell	1PCS	Stainless Steel SUS304 T=0.3mm	NI 30u"MIN Plated
1	Housing	1PCS	LCP UL94 V-0	Black

GENERAL TOLERANCES (UNLESS SPECIFIED)		DRAWN BY: HuangXiaoHao	Date: 2024.04.06	深圳市中科兴达科技有限公司 Shenzhen Zhongke Xingda Technological Co;Ltd.	
X.XXX	±0.10	CHECKED BY: liuzongliang	Date: 2024.04.06	TITLE: USB TYPE-C FEMALE 16PIN UPRIGHT SMTCH=4.58	
X.XX	±0.20				
X.X	±0.30	APPROVED BY: Jacky	Date: 2024.04.06	PART NO. CF616-003SLB11R-02	DWG NO. CF616-003-02
ANGULAR	±3°				
THIRD ANGLE PROJECTION		UNT mm	SCALE 1:1	DRAWING A4	SHEET NO. 1 OF 3 / REV. B

REV	ECN No.	DATE	REMARK
A	NEW	2023.09.04	NEW RELEASE

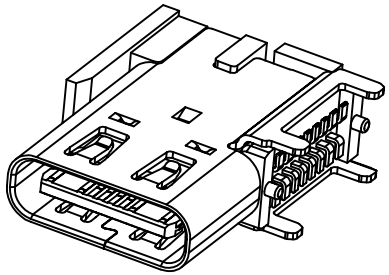

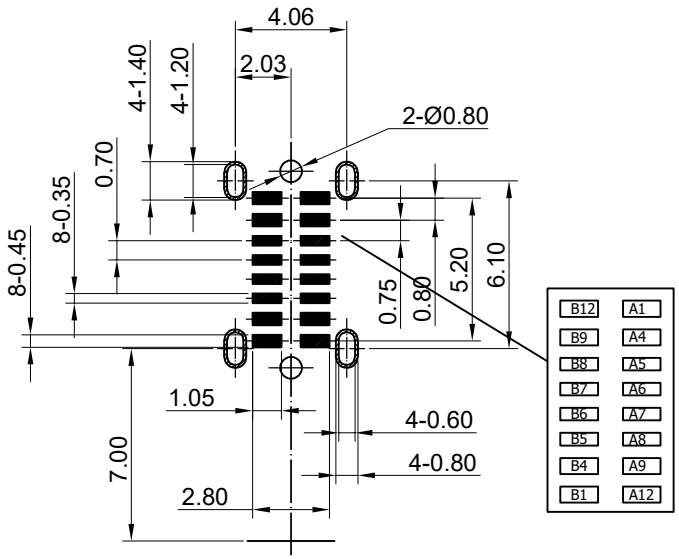

RECOMMEND P.C.B LAYOUT(TOW VIEW)

TOLERANCE FOR PCB LAYOUT IS ±0.05

Specifications:

1.Electrical Performance,

1-1. Current Rating:5 Amps. For Total VBUS/GND Pins;
0.5Amps For CC Pin,
0.25 Amps. For All Other Contact.

1-2. Voltage Rating:20V DC/AC (Rms. Max)

1-3. Contact Resistance: 40mΩ Max Initial.
50mΩ Max After Test

1-4.Dielectric Withstanding Voltage: 100V AV

1-5.Insulation Resistance:100MΩ Min

2.Mechanical Performance,

2-1.Insertion Force: 5~20N.

2-2.Extraction Force: 8~20N.

2-3.Durability: 10000 Cycles.

3.Environmental Performance:
Operating Temperature: -55°C~+85°C.

4.IR Reflow:
The Peak Temperature On The Board Shall
Be Maintained For 10 Seconds At 260°C.

5.Salt Spray:48H

Ordering Information:

CF 6/1 16/2 - 003 S L B/3 11/4 R/5 - 02

1.Product Type:
6:Upright

2.Pin No.:
16:16Pin

3.Housing Color:
B:Black

4.Contacts Plated:
11:Contact Area: Au 1u",Solder Tails:GF

5.Packing Options:
R:Tape & Reel

USB Type-C Pin Assignments

Pin Number	Signal Name	Pin Number	Signal Name
A1	GND	B12	GND
A2	----	B11	----
A3	----	B10	----
A4	VBUS	B9	VBUS
A5	CC1	B8	SBU2
A6	Dp1	B7	Dn2
A7	Dn1	B6	Dp2
A8	SBU1	B5	CC2
A9	VBUS	B4	VBUS
A10	----	B3	----
A11	----	B2	----
A12	GND	B1	GND

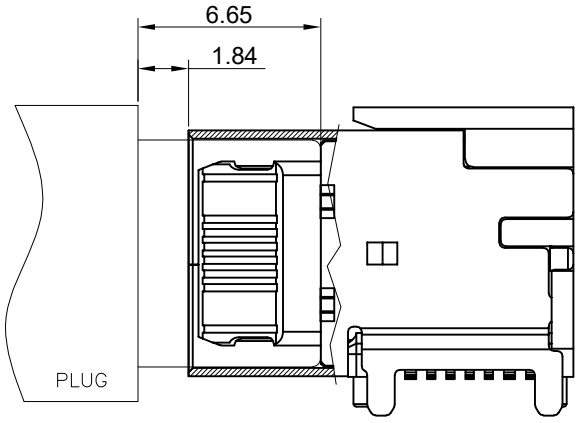

MATED CONDITION(REF.)

GENERAL TOLERANCES (UNLESS SPECIFIED)		DRAWN BY: HuangXiaoHao	Date: 2024.04.06	深圳市中科兴达科技有限公司 Shenzhen Zhongke Xingda Technological Co;Ltd.	
X.XXX	±0.10	CHECKED BY: liuzongliang	Date: 2024.04.06	TITLE: USB TYPE-C FEMALE 16PIN UPRIGHT SMTCH=4.58	
X.XX	±0.20				
X.X	±0.30	APPROVED BY: Jacky	Date: 2024.04.06	PART NO.: CF616-003SLB11R-02	DWG NO.: CF616-003-02
ANGULAR	±3°				
THIRD ANGLE PROJECTION		UNT: mm	SCALE: 1:1	DRAWING: A4	SHEET NO.: 2 OF 3 / REV.: B

RoHS Compliant

THIS DRAWING CONTAINS INFORMATION THAT IS PROPRIETARY TO ZDT TECHNOLOGY. AND SHOULD NOT BE USED WITHOUT WRITTEN PERMISSION

REV	ECN No.	DATE	REMARK
A	NEW	2020.9.3	NEW RELEASE

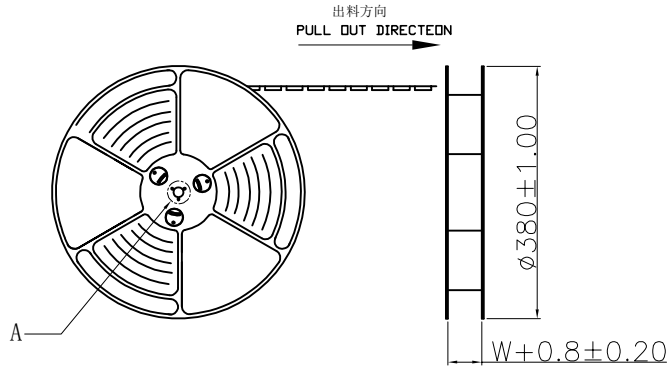

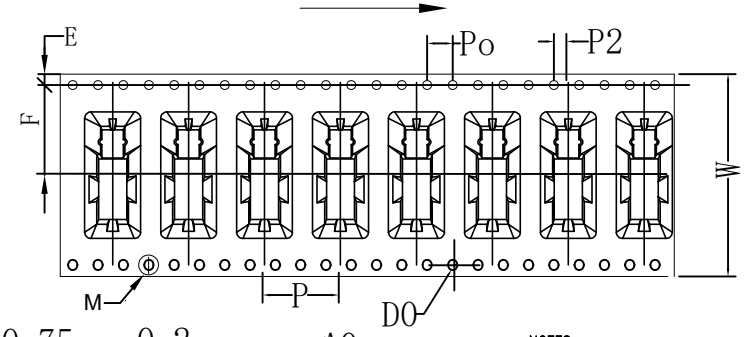

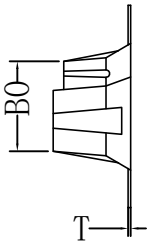

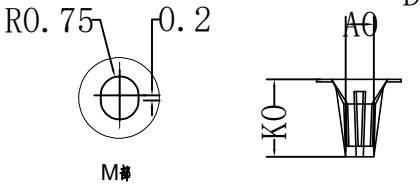

NOTES

1.帶子引導長度
LEAD TAPE LENGTH
出料方向
PULL OUT DIRECTEON

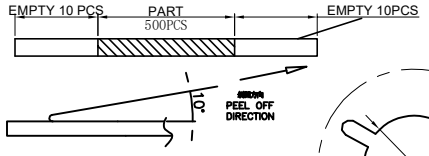

2.上帶 剝力力為：0.1~1.3N(10.2gf~130gf)
PEELING OFF FORCE OF TOP TAPE:0.1~1.3N(10.2gf~130gf)
出貨'運輸過程中一定注意：
THIS REQUIREMENT SHOULD BE APPLIED AT SHIPMENT:
卷帶在運輸過程中不能散開
PEELING OFF SHOULD NOT BE ALLOWED DURING TRANSPORTATION

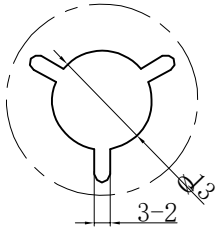

DETAIL:A
10:1

ITEM	W	A_0	A_1	B_0	B_1	K_0	K_1	P	F	T
DIM	$32.0^{+0.30}_{-0.30}$	$4.45^{+0.10}_{-0.10}$	$0.00^{+0.10}_{-0.10}$	$14.18^{+0.10}_{-0.10}$	$0.00^{+0.10}_{-0.10}$	$12.25^{+0.10}_{-0.10}$	$0.00^{+0.10}_{-0.10}$	$12.0^{+0.10}_{-0.10}$	$14.2^{+0.15}_{-0.15}$	$0.50^{+0.05}_{-0.05}$

D_0	D_1	P_0	P_2	E
$1.50^{+0.10}_{-0.00}$	$0.00^{+0.10}_{-0.00}$	$4.00^{+0.10}_{-0.10}$	$2.00^{+0.10}_{-0.10}$	$1.75^{+0.10}_{-0.10}$

at small positioning hole of the carrier tape side).
標簽黏貼處（朝捲裝包材的小定位孔一側）
Location of label sticking (label)

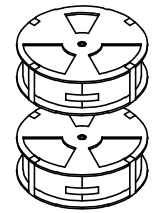

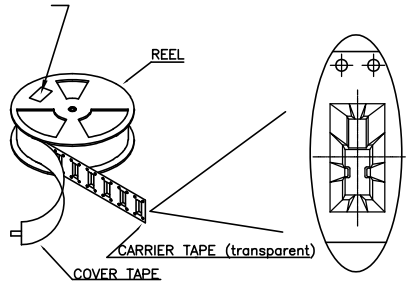

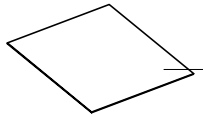

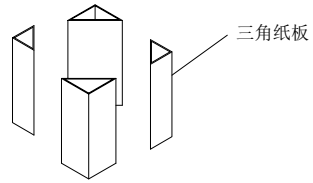

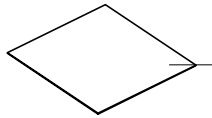

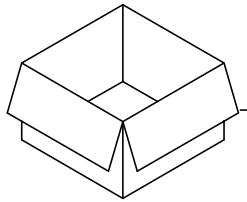

NOTE:
1.每捲包裝數量及每箱裝箱數量如左下表格.
Packing q'ty of each reel & carton as below table shown.
2.將裝滿產品的卷盤放入紙箱并以膠帶封口
Put reels in the carton and use adhesive tape to seal up.

卷带	规格：ϕ380mm	包装数量：500PCS
纸箱	规格：390mmX390mmX310mm	包装数量：8盘 / 4000PCS

PART NO.:
SEE THE PART NUMBER CODE

深圳市中科兴达科技有限公司
SHENZHEN ZDT TECHNOLOGY CO.,LTD

QUALITY SYMBOL	GENERAL TOLERANCES (UNLESS SPECIFIED)	
C	x.xxxx	± ---
	x.xxx	± 0.10
	x.xx	± 0.25
	x.x	± 0.30
	ANGULAR	± --°

TITLE: USB TYPE CF 16PIN 侧插SMT CH=4.58--包装规范

DWG.NO.: PK-CF616-003SLB11R-02

SHEET NO.: 1 OF 1

DIMENSION STYLE: MM ONLY

DESIGN UNITS: METRIC

SCALE: 1:1

	DRAWN BY	DATE
	SAM	2020.9.3
	CHECKED BY	DATE
	JAY	2020.9.3
	APPROVED BY	DATE
	JACKY	2020.9.3

THIRD ANGLE PROJECTION

frame size: A4