REV	ECN No.	DATE	REMARK
A	NEW	2020.01.03	NEW RELEASE
B	---	2024.06.25	整理图纸，增加TID NO.

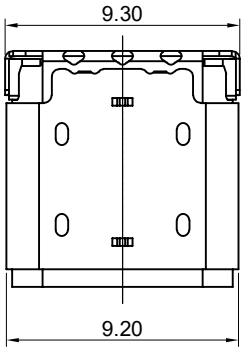

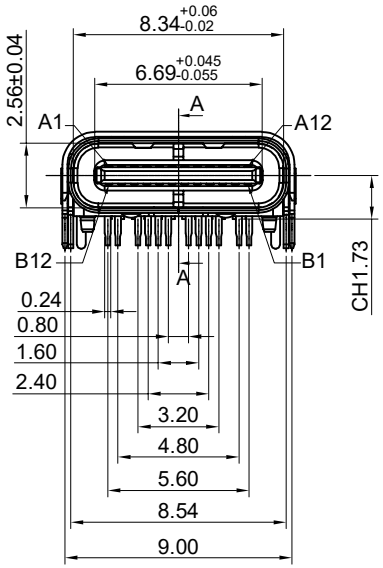

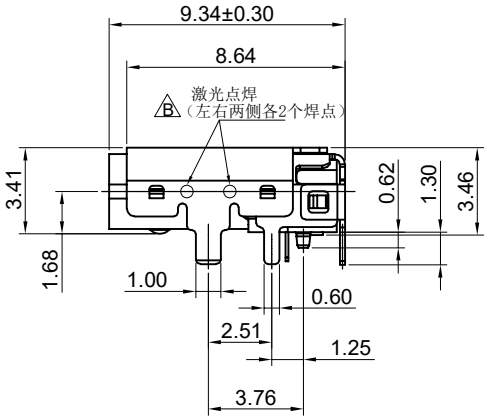

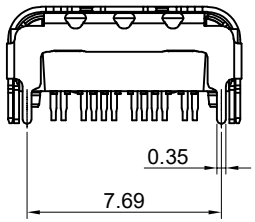

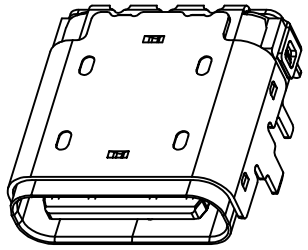

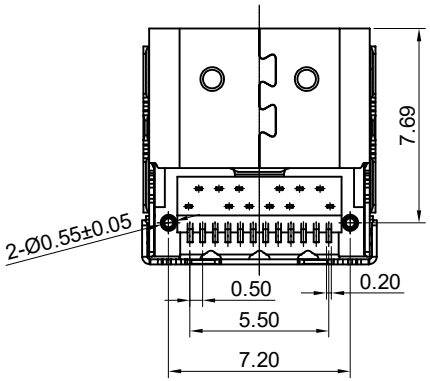

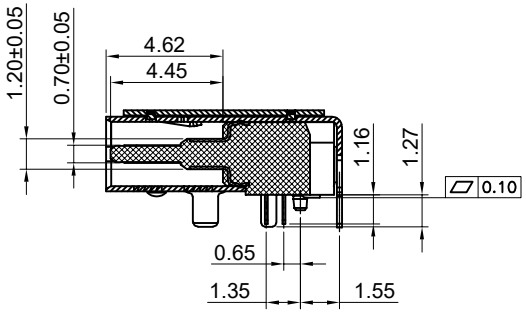

SECTION A-A

TABLE:

NO	PART	Q'TY	Material
1	INNER SHELL	1	STAINLESS STEEL 304, NI 30u" MIN PLATED
2	TOP SHELL	1	STAINLESS STEEL 304, NI 30u" MIN PLATED
3	EMI Plate	1	STAINIESS STEEL 301,NI 30u" MIN PLATED
4	Mid Plate	1	STAINIESS STEEL 301, NO PLATED
5	SMT CONTACT	12	COPPER ALLOY C18400,Au Plated On Vontact Area GF Plated On Solder Area;Nickel 50u"Min Underplating Over All.
7	DIP CONTACT	12	COPPER ALLOY C18400,Au Plated On Vontact Area GF Plated On Solder Area;Nickel 50u"Min Underplating Over All.
8	HOUSING	1	LCP BLACK UL94 V-0

GENERAL TOLERANCES (UNLESS SPECIFIED)		DRAWN BY: HuangXiaoHao	Date: 2024.06.25
X.XXX	±0.10	CHECKED BY: liuzongliang	Date: 2024.06.25
X.XX	±0.25		
X.X	±0.30	APPROVED BY: Jacky	Date: 2024.06.25
ANGULAR	±3°		
THIRD ANGLE PROJECTION		UNT: mm	SCALE: 1:1

深圳市中科兴达科技有限公司
Shenzhen Zhongke Xingda Technological Co;Ltd.

TITLE: USB TYPE-C FEMALE 24PIN 前插后贴带上铁壳L=9.34 CH1.73			
PART NO.: CF216-24SLB12R-02		DWG NO.: CF216-24-02	
DRAWING: A4	SHEET NO.: 1 OF 3	REV.: B	

REV	ECN No.	DATE	REMARK
A	NEW	2020.01.03	NEW RELEASE
B	---	2024.06.25	整理图纸，增加TID NO.

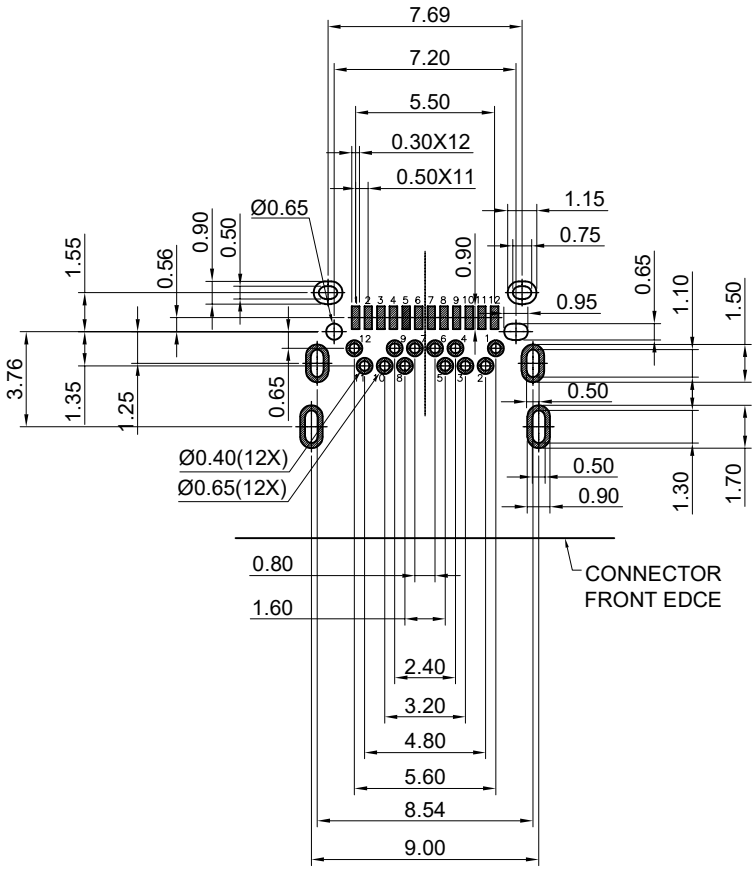

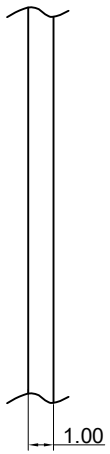

RECOMMEND P.C.B LAYOUT(T=1.00mm)

TOLERANCE UNSPECIFIED ±0.05mm

USB Type-C Pin Assignments

Pin Number	Signal Name
A1	GND
A2	SSTXp1
A3	SSTXn1
A4	VBUS
A5	CC1
A6	Dp1
A7	Dn1
A8	SBU1
A9	VBUS
A10	SSRXn2
A11	SSRXp2
A12	GND

Pin Number	Signal Name
B12	GND
B11	SSRXp1
B10	SSRXn1
B9	VBUS
B8	SBU2
B7	Dn2
B6	Dp2
B5	CC2
B4	VBUS
B3	SSTXn2
B2	SSTXp2
B1	GND

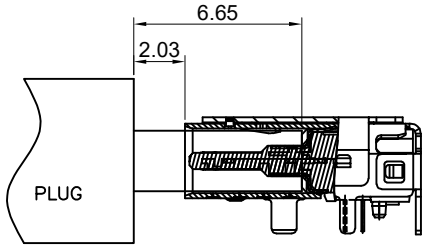

Mated Condition(REF.)

NOTE:
1.ELECTRICAL PERFORMANCE,
1-1. CURRENT RATING:5 AMPS. FOR TOTAL VBUS/GND PINS;
1.25AMPS FOR CC PIN,
0.25 AMPS. FOR ALL OTHER CONTACT.
1-2. VOLTAGE RATING:20V DC/AC (RMS. MAX)
1-3. LLCR:.
VBUS & GND PINS AND OTHER PINS: 40MΩ/PIN MAX.
SHIELD:50MΩ/MAX.
LLCR MAX. CHANGE OF ALL PINS: 10MΩ.
1-4.INSULATION RESISTANCE: 100MΩ MIN
1-5.DIELECTRIC WITHSTAND VOLTAGE,AC 100V FOR 1 MINUTE.
2.MECHANICAL PERFORMANCE,
2-1.INSERTION FORCE: 5~20N.
2-2.EXTRACTION FORCE: 8~20N.
2-3.DURABILITY: 10000 CYCLES.
3.ENVIRONMENTAL PERFORMANCE:
OPERATING TEMPERATURE: -25°C~+85°C.
4.IR REFLOW:
THE PEAK TEMPERATURE ON THE BOARD SHALL
BE MAINTAINED FOR 10 SECONDS AT 260°C.
5.COMPLIANCE WITH ROHS REQUIREMENTS.
6.SALT SPRAY:24H

TID No.	11296

Ordering Information:

CF216 - 24 S L B XX R- 02
1 2 3

1.Housing Color:
B:Black
2.Contacts Plated:
12:Contact Area: Au 3u",Solder Tails:GF
15:Contact Area: Au 30u",Solder Tails:GF
3.Packing Options:
R:Tape & Reel

GENERAL TOLERANCES (UNLESS SPECIFIED)		DRAWN BY: HuangXiaoHao	Date: 2024.06.25	深圳市中科兴达科技有限公司 Shenzhen Zhongke Xingda Technological Co;Ltd.	
X.XXX	±0.10	CHECKED BY: liuzongliang	Date: 2024.06.25	TITLE: USB TYPE-C FEMALE 24PIN 前插后贴带上铁壳L=9.34 CH1.73	
X.XX	±0.25				
X.X	±0.30	APPROVED BY: Jacky	Date: 2024.06.25	PART NO. CF216-24SLB12R-02	DWG NO. CF216-24-02
ANGULAR	±3°				
THIRD ANGLE PROJECTION		UNT mm	SCALE 1:1	DRAWING A4	SHEET NO. 2 OF 3 / REV. B

REV	ECN No.	DATE	REMARK
A	NEW	2020.01.03	NEW RELEASE
B	---	2024.06.25	整理图纸，增加TID NO.

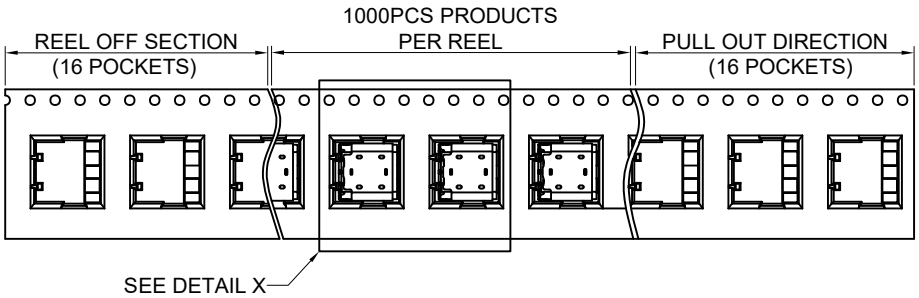

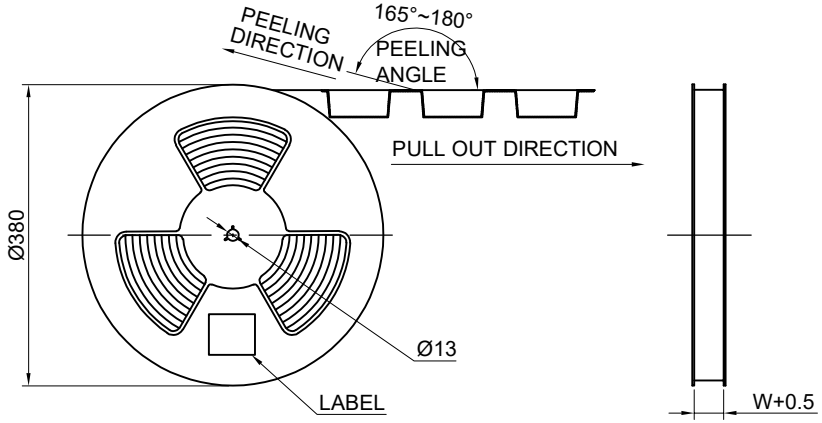

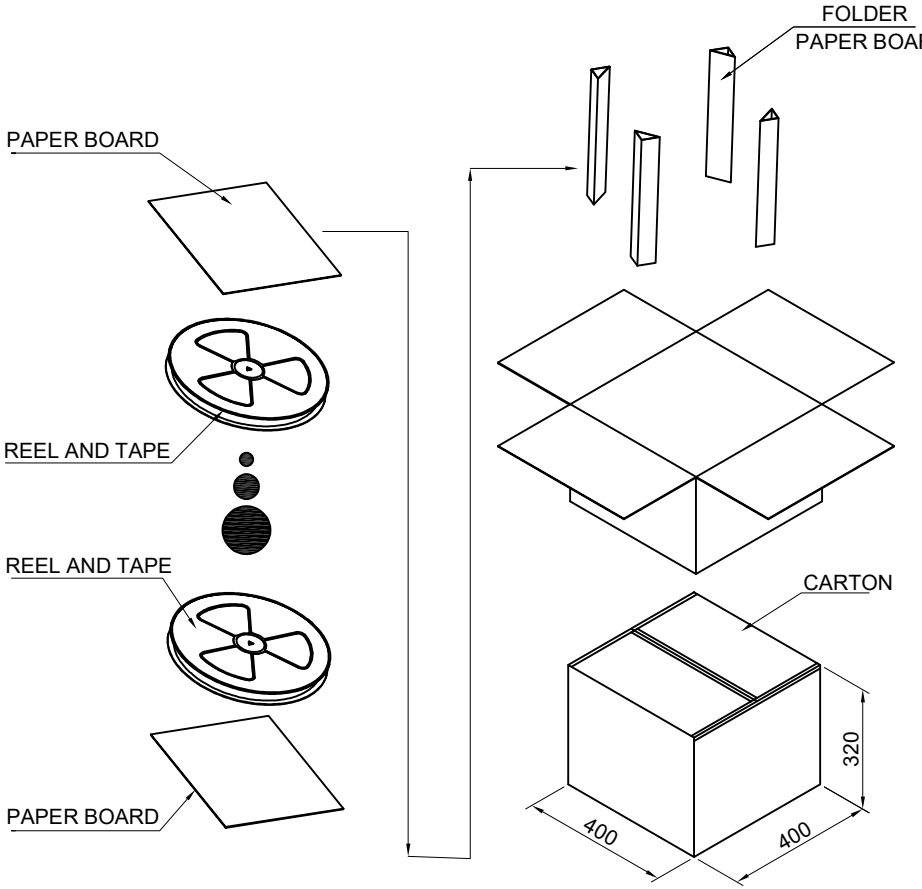

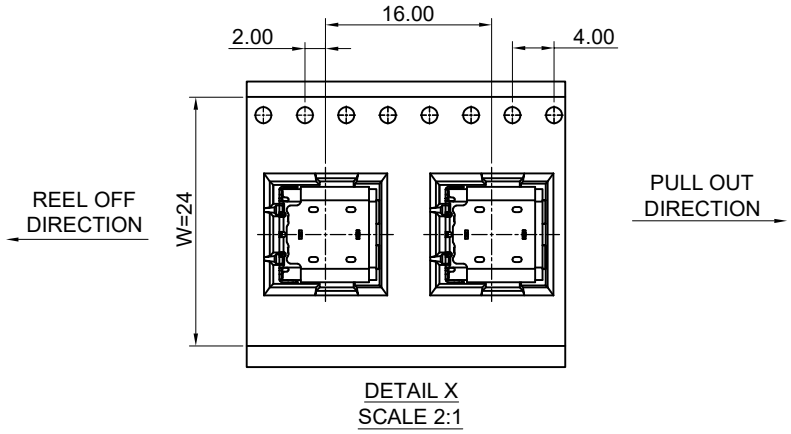

DETAIL X
SCALE 2:1

	REEL/TRAY	CARTON
CONNECTOR (PCS)	1000	10000

GENERAL TOLERANCES (UNLESS SPECIFIED)		DRAWN BY: HuangXiaoHao	Date: 2024.06.25
X.XXX	±0.10	CHECKED BY: liuzongliang	Date: 2024.06.25
X.XX	±0.25		
X.X	±0.30	APPROVED BY: Jacky	Date: 2024.06.25
ANGULAR	±3°		
THIRD ANGLE PROJECTION		UNT: mm	SCALE: 1:1

深圳市中科兴达科技有限公司
Shenzhen Zhongke Xingda Technological Co;Ltd.

TITLE: USB TYPE-C FEMALE 24PIN 前插后贴带上铁壳L=9.34 CH1.73		
PART NO.: CF216-24SLB12R-02	DWG NO.: CF216-24-02	
DRAWING: A4	SHEET NO.: 3 OF 3	REV.: B