REV	ECN No.	DATE	REMARK
A	NEW	2021.05.23	NEW RELEASE

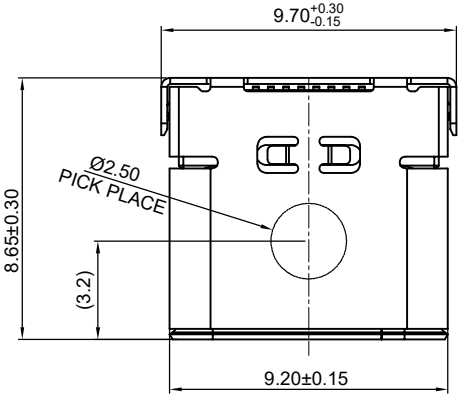

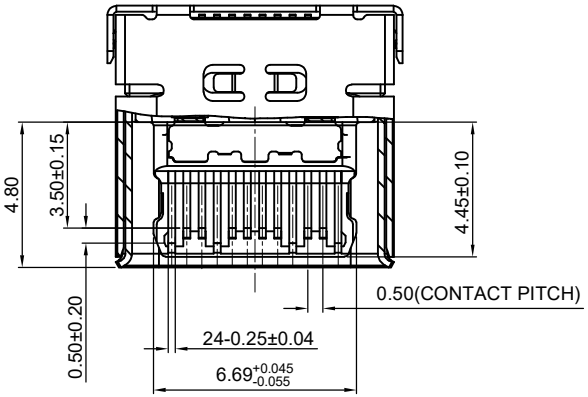

SECTION B-B

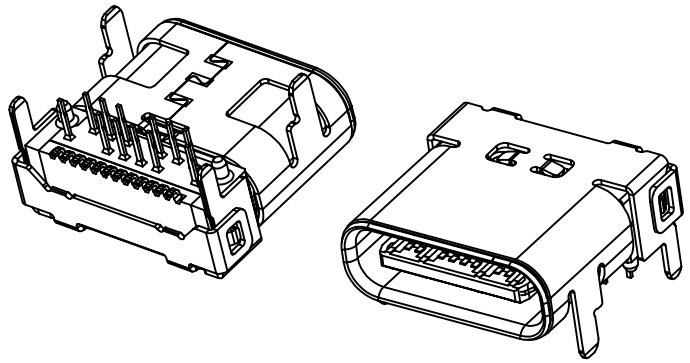

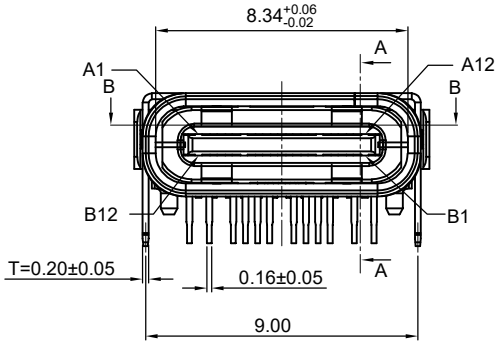

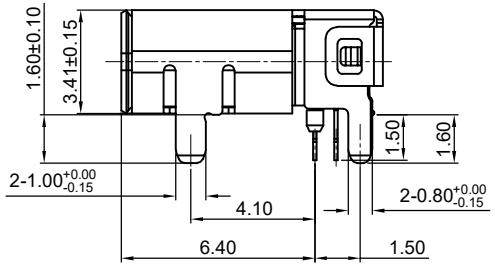

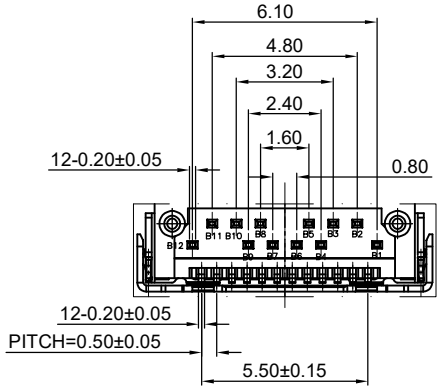

Detail A

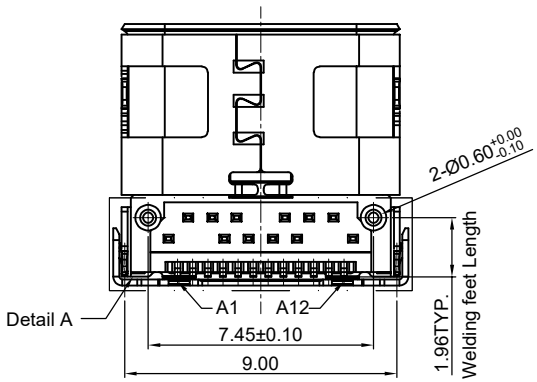

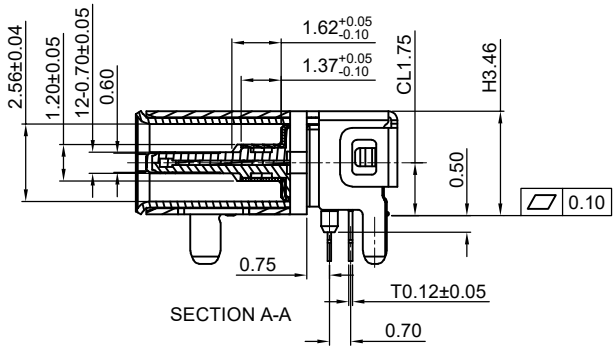

SECTION A-A

TYPE:

NO.	DESCRIPTION	MATERIAL	REMARKS	QTY
7	EMC PLATE	SUS301 T=0.10mm	CLEAR ONLY	2PCS
6	OUTER SHELL	SUS304 T=0.20mm	NICKEL 30u" MIN PLATING	1PCS
5	INNER SHELL	SUS304 T=0.20mm	NICKEL 30u" MIN PLATING	1PCS
4	SHIELDING PLATE	SUS301 T=0.15mm	CLEAR ONLY	1PCS
3	SMT CONTACT	C18150-H T=0.12mm	Ni 50u" MIN. UNDER PLATED OVER ALL. Au PLATED ON THE FUNCTIONAL AREA OF CONTACT. PLATING Tin OF THE SOLDER AREA	1SET
2	DIP CONTACT	C18150-H T=0.12mm		1SET
1	HOUSING	LCP UL94V-0	BLACK	1PCS

GENERAL TOLERANCES (UNLESS SPECIFIED)		DRAWN BY: HuangXiaoHao	Date: 2021.05.23	深圳市中科兴达科技有限公司 Shenzhen Zhongke Xingda Technological Co;Ltd.	
X.XXX	±0.10	CHECKED BY: liuzongliang	Date: 2021.05.23	TITLE: USB 3.1 C Type Rec. Top Connector Double Shell (CL=1.75 L=8.65mm)	
X.XX	±0.25				
X.X	±0.30	APPROVED BY: Jacky	Date: 2021.05.23	PART NO. CF147-24LB02R-C3	DWG NO. CF147-24-C3
ANGULAR	±3°				
THIRD ANGLE PROJECTION		UNT mm	SCALE 1:1	DRAWING A4 / SHEET NO. 1 OF 3	REV. A

REV	ECN No.	DATE	REMARK
A	NEW	2021.05.23	NEW RELEASE

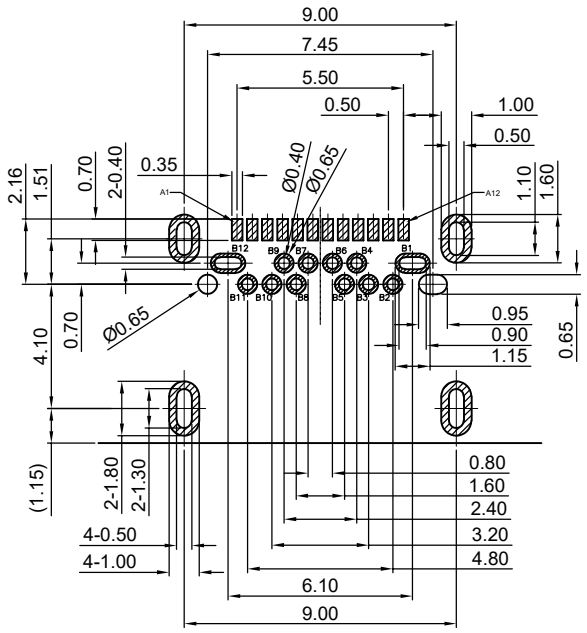

RECOMMEND P.C.B LAYOUT(COMPONENT SIDE)

TOLERANCE FOR PCB LAYOUT IS ± 0.05

KEEP OUT AREA

NOTE:

1. Electrical Characteristics:
1-1: Current Rating: 5A For Pin(A4,A9,B4,B9)
1.25A For Pin(B5)
0.25A For Others Pin
1-2: Voltage Rating:20V
1-3: Insulation Resistance: 100MΩ Min.
1-4: Contact Resistance:
VBUS & GND Pins And Other Pins: 40mΩ/PIN Max.
Shield:50mΩ/Max.
Shield:LIcr Max. Change Of All Pins: 10mΩ.
1-5: Dielectric Withstanding Voltage: 100V/AC 1Minute
2. Mechanical Characteristics:
Insertion Force: 5~20N
Extraction Force: Initial: 8~20N
After durability: 6~20N
Durability :10000 Cycles
3. Operating Temperature: -25°C TO +85°C
4.Mid Plate, EMC Plate, Shell Connected Together

TID NO.	9110
IEC62680-1-3	24B01N001793-001-COM

Ordering Information:

CF 147 - 24 S L B(1) 12(2) R(3) - C3

1.Housing Color:
B:Black
2.Contacts Plated:
12:Contact Area: Au 3u",Solder Tails:Tin
3.Packing Options:
R:Tape & Reel

USB TYPE-C PIN ASSIGNMENTS

PIN NUMBER	SIGNAL NAME	PIN NUMBER	SIGNAL NAME
A1	GND	B12	GND
A2	SSTXp1	B11	SSRXp1
A3	SSTXn1	B10	SSRXn1
A4	VBUS	B9	VBUS
A5	CC1	B8	SBU2
A6	Dp1	B7	Dn2
A7	Dn1	B6	Dp2
A8	SBU1	B5	CC2
A9	VBUS	B4	VBUS
A10	SSRXn2	B3	SSTXn2
A11	SSRXp2	B2	SSTXp2
A12	GND	B1	GND

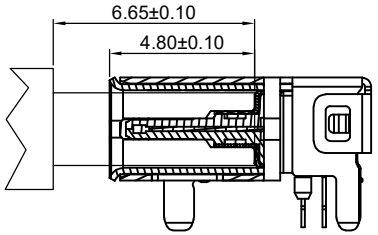

MATED CONDITION(REF.)

GENERAL TOLERANCES (UNLESS SPECIFIED)		DRAWN BY: HuangXiaoHao	Date: 2021.05.23	深圳市中科兴达科技有限公司 Shenzhen Zhongke Xingda Technological Co;Ltd.	
X.XXX	±0.10	CHECKED BY: liuzongliang	Date: 2021.05.23	TITLE: USB 3.1 C Type Rec. Top Connector Double Shell (CL=1.75 L=8.65mm)	
X.XX	±0.25				
X.X	±0.30	APPROVED BY: Jacky	Date: 2021.05.23	PART NO. CF147-24LB02R-C3	DWG NO. CF147-24-C3
ANGULAR	±3°				
THIRD ANGLE PROJECTION		UNT mm	SCALE 1:1	DRAWING A4	SHEET NO. 2 OF 3 / REV. A

REV	ECN No.	DATE	REMARK
A	NEW	2021.05.23	NEW RELEASE

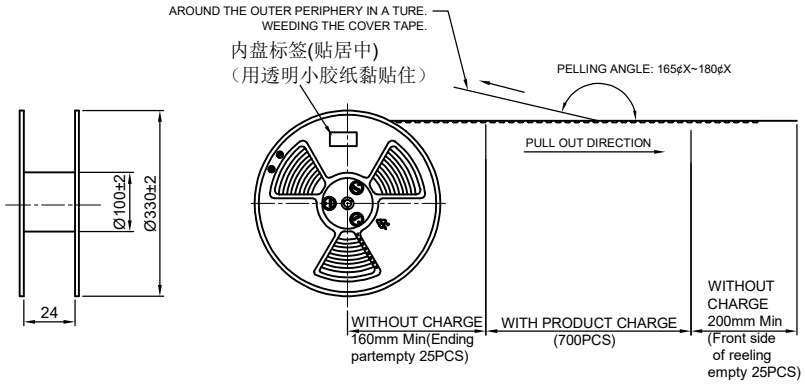

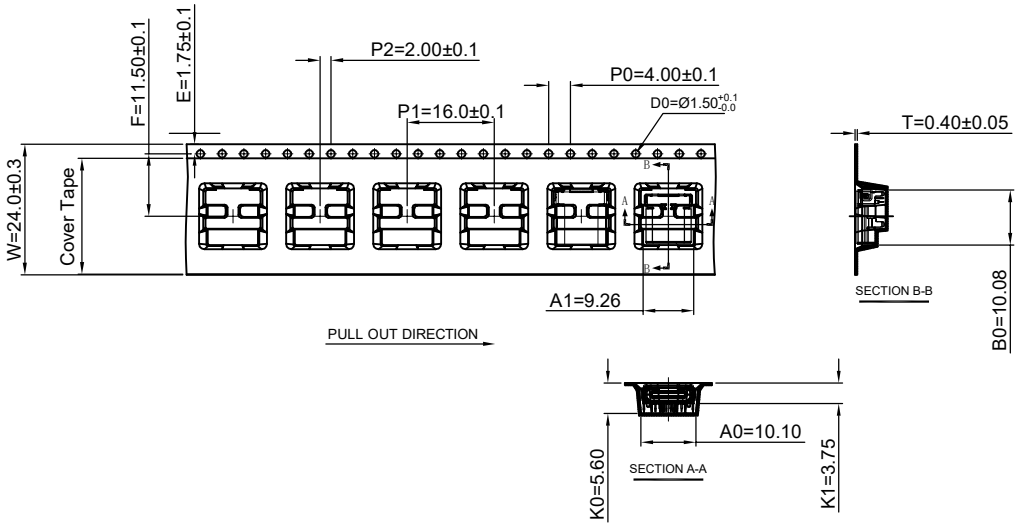

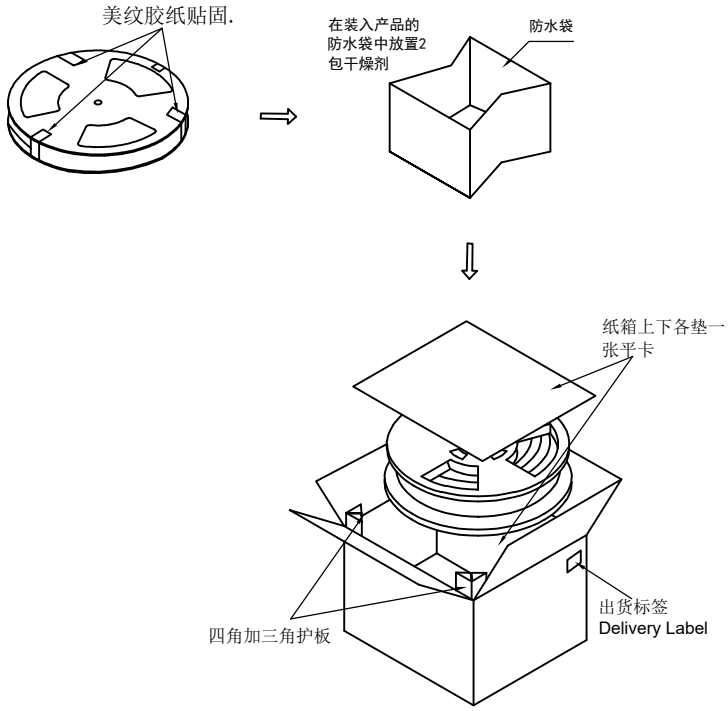

个 / 卷 Pcs/Reel	卷 / 箱 Reel/Ctos.	个 / 箱 Pcs/Ctos.	净重N. W.	毛重G. W.
700	10	7000	/kg	/kg

NO.	包材名称 Items	包材料号 Item no	用量 Usage	适用类别 Series	备 注 / Remark
①	纸箱 Carton	PE027	1	(空白纸箱 Blank carton)	外尺寸:375*375*310mm,K=K
②	PE Bag	P120198-01	2		600*600*0.05mm
③	载带 Carrier tape		/		W=24mm,12.0m/R透明PET
④	自粘上带 cover tape	P120122-01	/	自粘上带	W=21.3MM,200m/r透明色
⑤	塑胶卷轴 Plastic Reel	P120021-01	10		Ø330mm,W=30mm
⑥	干燥剂 Desiccant	P120012-01	4		——
⑦	三角卡板/平卡		4/2		365*300*5mm/360*360*5mm
⑧	合格标签 Qualified Label		10		
⑨	出货标签 Delivery Label		1		

包装规范说明:

1. 如图所示首先CARRIER TAPE（载带）需先预留25PCS空格后方可置入成品,并附COVER TPAE(上带)覆盖于上,再配合带装机自动卷绕于REEL(塑胶卷轴)收料.
As shown from picture, the initial starting carrier need to be emptied for 25 pcs, then put connector on Inth carrier; Then cover it with Cover Tape, and Reeling it with Reel auto machine.
2. 在定量包装完成后,前端CARRIER TAPE亦需预留25PCS空格,而COVER TPAE配合CARRIER TYPE长度覆盖后,并须再超出200mm以上,最后以胶纸贴固,并于REEL盘上方贴合格标签1张.
In the end of the Reel, need to empty 25 pcs carrier tape; After covering the carrier, then the Cover Tape need to be 200mm longer, and use tape to fix the cover tape to the reel. Put "Qualified label" on the Reel.
3. 注意:COVER TAPE不可浮起或有贴附不顺,歪斜及成品放置方向错误之现象.再按图示贴3处美纹胶.
Attention: no deformation of Cover Tape is allowed (protruded plastic, or not smooth, bednt or product is wrong positioned), and 3 places of masking tape are attached as shown in the figure.
4. 在纸箱内左右,前后侧各放入一块三角卡板,每个PE袋中装入5个REEL盘,并在PE袋中放入2PCS干燥剂,用胶带封好.在每个纸箱内装入10PCS卷盘,共2叠.纸箱内上下各垫一张平卡，盖上箱盖后以胶带封箱,于侧位置贴出货标签一张.Inside of carton, at left and right side, put triangle fixed card; Put 5 Reels to PE bag, and put 1 bags of desiccant inside the PE bag. Each carton has 10 reels. Put "Delivery label" on side of the carton.
5. 零箱部分，出货时须用缓冲物填满.
The fractional box must be filled by cushion before shipment.

GENERAL TOLERANCES (UNLESS SPECIFIED)		DRAWN BY: HuangXiaoHao	Date: 2021.05.23	深圳市中科兴达科技有限公司 Shenzhen Zhongke Xingda Technological Co;Ltd.	
X.XXX	±0.10	CHECKED BY: liuzongliang	Date: 2021.05.23	TITLE: USB 3.1 C Type Rec. Top Connector Double Shell (CL=1.75 L=8.65mm)	
X.XX	±0.25				
X.X	±0.30	APPROVED BY: Jacky	Date: 2021.05.23	PART NO. CF147-24LB02R-C3	DWG NO. CF147-24-C3
ANGULAR	±3°				
THIRD ANGLE PROJECTION		UNT mm	SCALE 1:1	DRAWING A4	SHEET NO. 3 OF 3 / REV. A