REV	ECN No.	DATE	REMARK
A	NEW	2022.05.16	NEW RELEASE
B	---	2023.11.23	优化塑胶结构
C	---	2025.07.18	产品结构优化，改善端子翘PIN,溃PIN风险

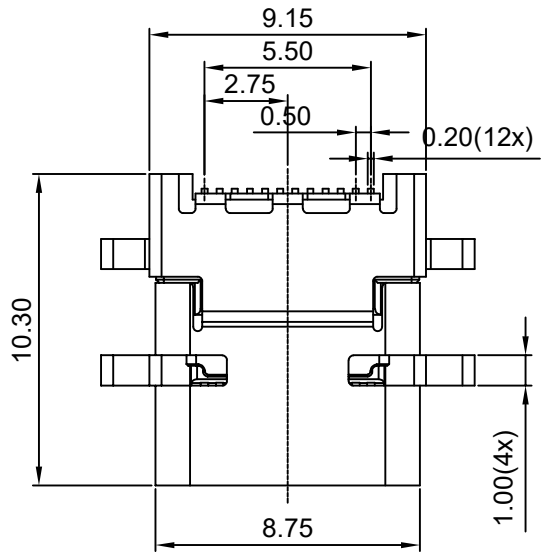

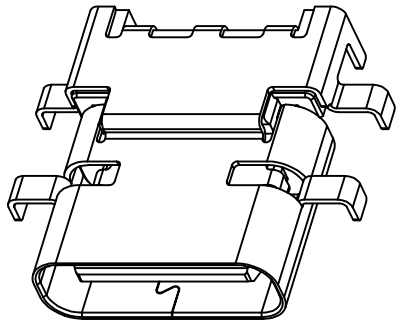

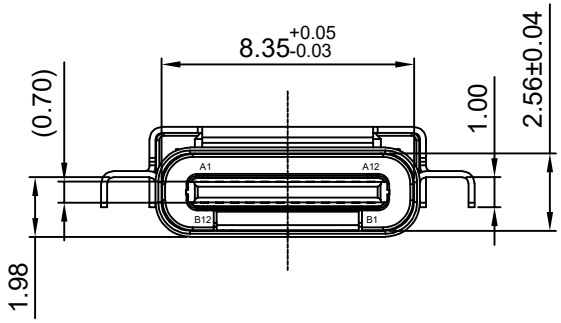

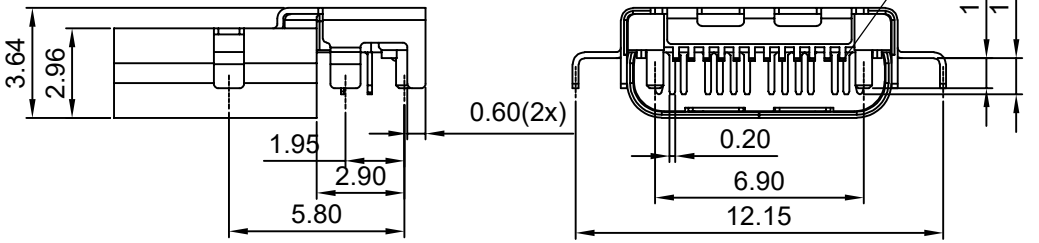

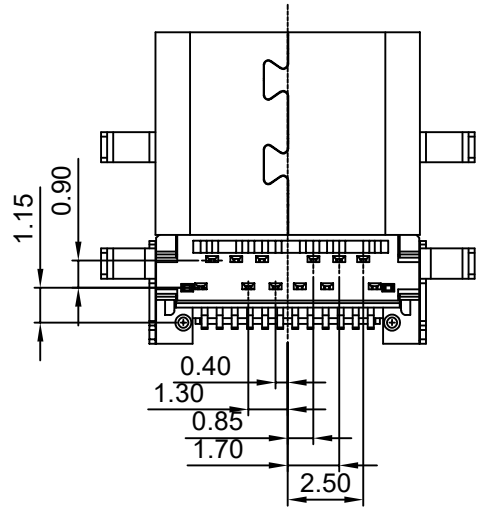

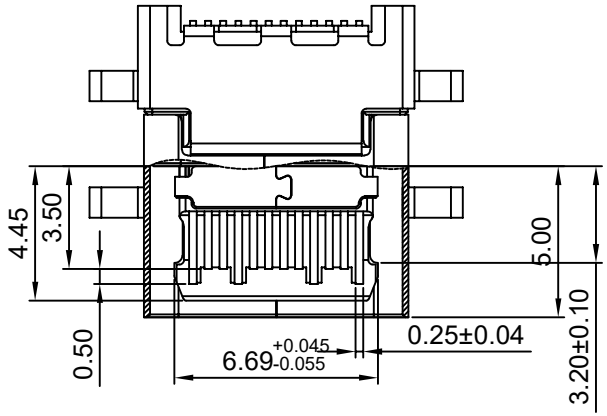

Table:

NO.	Description	QTY	Material	Remarks
5	Shell	1PCS	Stainless Steel	NI Plated
4	EMI Plate	1PCS	Stainless Steel	NI Plated
3	Mid Plate	1PCS	Stainless Steel	NI/SN Plated
2	Contact	24PCS	Copper Alloy	Au Plated On Contact Area Tin Plated On Solder Area; Nickel Under Plating Over All.
1	Housing	1PCS	High Temperature Plastic LCP	UL94V-0 Black

GENERAL TOLERANCES (UNLESS SPECIFIED)		DRAWN BY: HuangXiaoHao	Date: 2025.07.18	深圳市中科兴达科技有限公司 Shenzhen Zhongke Xingda Technological Co;Ltd.	
X.XXX	±0.10	CHECKED BY: liuzongliang	Date: 2025.07.18	TITLE: USB 3.1 C TYPE 沉板前DIP/后SMT 成品6脚插板	
X.XX	±0.25				
X.X	±0.30	APPROVED BY: Jacky	Date: 2025.07.18	PART NO.: CF130-24SLB02R-C3	DWG NO.: CF130-24-43
ANGULAR	±3°				
THIRD ANGLE PROJECTION		UNT: mm	SCALE: 1:1	DRAWING: A4	SHEET NO.: 1 OF 2 / REV.: A

REV	ECN No.	DATE	REMARK
A	NEW	2022.05.16	NEW RELEASE
B	---	2023.11.23	优化塑胶结构
C	---	2025.07.18	产品结构优化，改善端子翘PIN,溃PIN风险

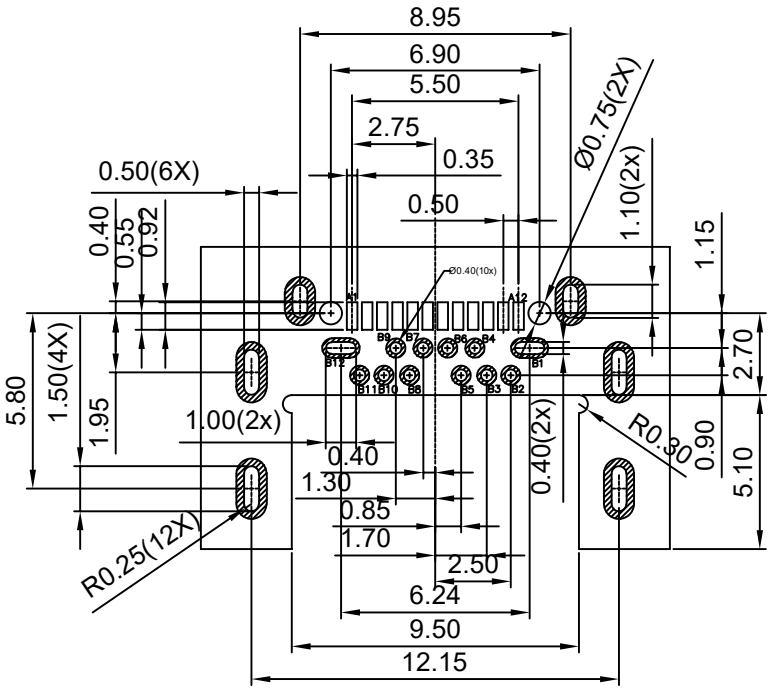

PCB LAYOUT (RECOMMENDED)

(Tol:±0.05)

Specifications:

1.Electrical Performance,

1-1. Current Rating:5 Amps

1-2. Voltage Rating:20V DC/AC (Rms. Max)

1-3. Contact Resistance: 40mΩ Max Initial.
50mΩ Max After Test

1-4.Dielectric Withstanding Voltage: 100V AV

1-5.Insulation Resistance:100MΩ Min

2.Mechanical Performance,

2-1.Insertion Force: 5~20N.

2-2.Extraction Force: 8~20N.

2-3.Durability: 10000 Cycles.

3.Environmental Performance:
Operating Temperature: -25°C~+85°C.

4.IR Reflow:
The Peak Temperature On The Board Shall Be Maintained For 10 Seconds At 260°C.

Ordering Information:

CF 1 30 - 24 S L X XX X - 43
(1) (2) (3) (4)

1.Pin No.:
24:24Pin

2.Housing Color:
B:Black

3.Contacts Plated:
01:Contact Area: GF,Solder Tails:Sn

4.Packing Options:
R:Tape & Reel

USB Type-C Pin Assignments

Pin Number	Signal Name	Pin Number	Signal Name
A1	GND	B12	GND
A2	SSTXp1	B11	SSRXp1
A3	SSTXn1	B10	SSRXn1
A4	VBUS	B9	VBUS
A5	CC1	B8	SBU2
A6	Dp1	B7	Dn2
A7	Dn1	B6	Dp2
A8	SBU1	B5	CC2
A9	VBUS	B4	VBUS
A10	SSRXn2	B3	SSTXn2
A11	SSRXp2	B2	SSTXp2
A12	GND	B1	GND

GENERAL TOLERANCES (UNLESS SPECIFIED)		DRAWN BY: HuangXiaoHao	Date: 2025.07.18	深圳市中科兴达科技有限公司 Shenzhen Zhongke Xingda Technological Co;Ltd.	
X.XXX	±0.10	CHECKED BY: liuzongliang	Date: 2025.07.18	TITLE: USB 3.1 C TYPE 沉板前DIP/后SMT 成品6脚插板	
X.XX	±0.25				
X.X	±0.30	APPROVED BY: Jacky	Date: 2025.07.18	PART NO. CF130-24SLB02R-C3	DWG NO. CF130-24-43
ANGULAR	±3°				
THIRD ANGLE PROJECTION		UNT mm	SCALE 1:1	DRAWING A4	SHEET NO. 2 OF 2 / REV. A

REV	ECN No.	DATE	REMARK
A	NEW	2025.07.22	NEW RELEASE

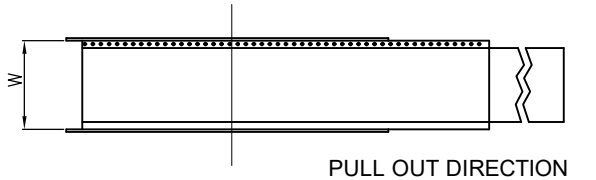

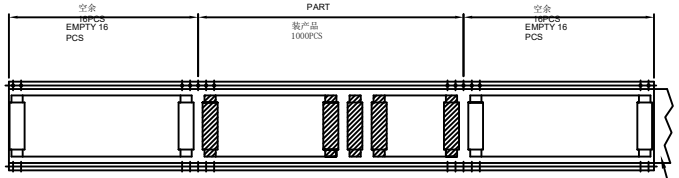

PULL OUT DIRECTION

TOP COVER TAPE

ITEM 項目	PARTS NAME 零件名稱	FINISH/REMARK 處理/備註
1	CONNECTOR	10000 PCS/BOX
2	BOX	10 REEL/BOX
3	WATERPROOF BAG	1 PCS
4	REEL	1000 PCS/REEL
5	COVER TAPE	Wide=24mm
6	CARRIER TAPE	--
7	LABEL	批號標籤

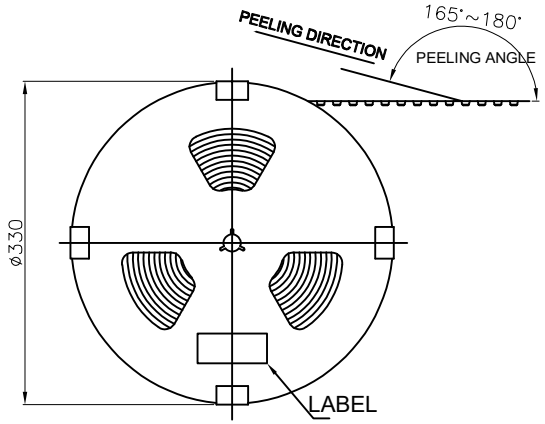

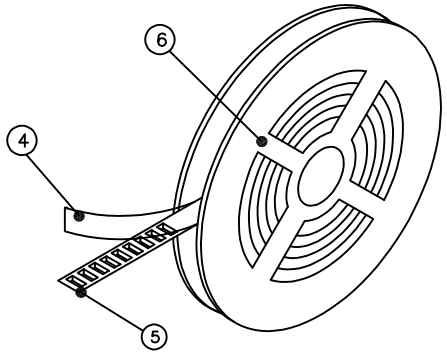

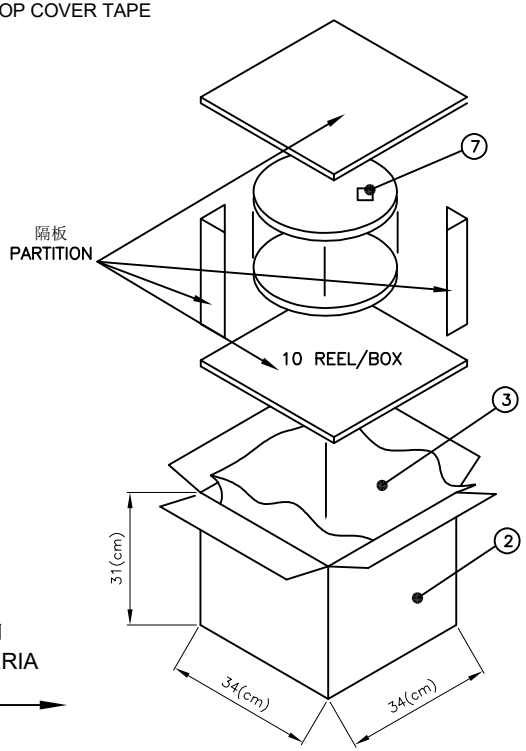

收料方向
CATHER MATERIAL DIRECTION

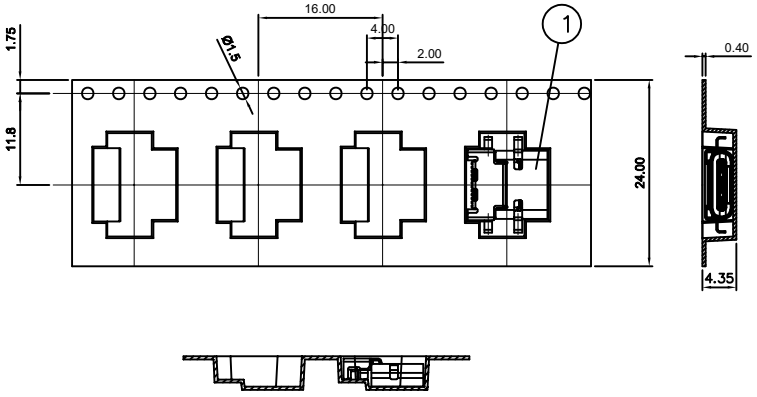

客戶放料方向
INPUT MATERIA DIRECTION

TAPE REEL成品擺放方向

NOTES
1.MATERIAL: PS (Color: 透明)
2.DEFORMATION(變形)&DAMAGE(損壞): NA.(不可)

GENERAL TOLERANCES (UNLESS SPECIFIED)		DRAWN BY: HuangXiaoHao	Date: 2025.07.22	深圳市中科兴达科技有限公司 Shenzhen Zhongke Xingda Technological Co;Ltd.	
X.XXX	±0.10	CHECKED BY: liuzongliang	Date: 2025.07.22	TITLE: USB 3.1 C TYPE 母头沉板SMT+DIP后中大只脚DIP 包装图	
X.XX	±0.25				
X.X	±0.30	APPROVED BY: Jacky	Date: 2025.07.22	PART NO. CF130-24SLB02R-C3	DWG NO. PK-CF130-24-43
ANGULAR	±3°				
THIRD ANGLE PROJECTION		UNT mm	SCALE 1:1	DRAWING A4	SHEET NO. 1 OF1 / REV. A