RoHS Compliant

THIS DRAWING CONTAINS INFORMATION THAT IS PROPRIETARY TO ZDT TECHNOLOGY. AND SHOULD NOT BE USED WITHOUT WRITTEN PERMISSION

TYPE C协会认证TID NO. 2753

REV	ECN No.	DATE	REMARK
A	NEW	2022.07.11	NEW RELEASE
B	ECN202303004	2023.03.13	盖子过炉后松脱，干涉由0.2改为0.4
C	ECR230916-004	2023.09.16	修正图纸规格描述

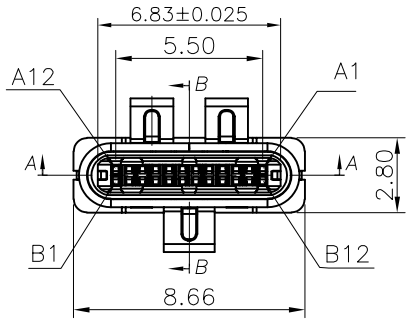

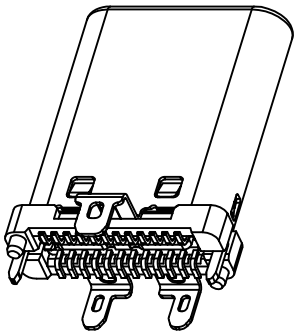

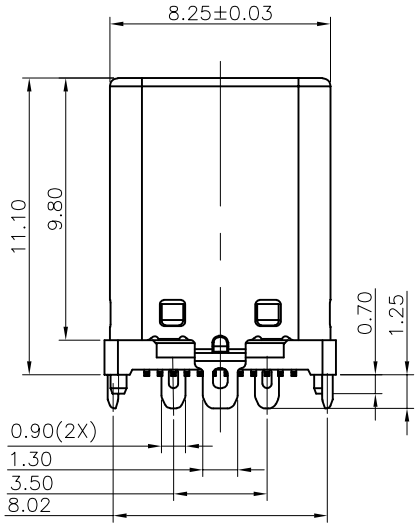

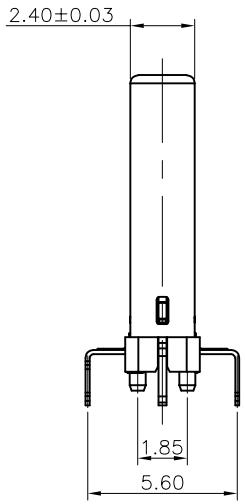

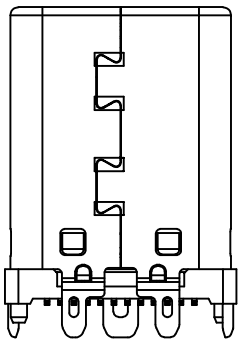

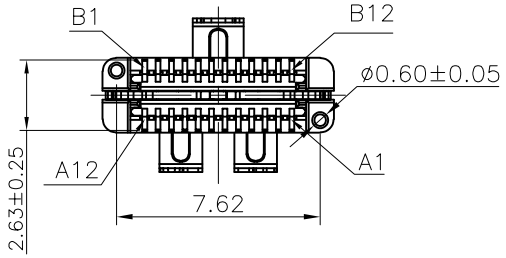

NOTE:
1.ELECTRICAL PERFORMANCE,
1-1. CURRENT RATING:3A
1-2. VOLTAGE RATING:5V/20V DC/AC (RMS. MAX)
1-3. LLCR:.
VBUS & GND PINS AND OTHER PINS: 40MΩ/PIN MAX.
SHIELD:50MΩ/MAX.
LLCR MAX. CHANGE OF ALL PINS: 10MΩ.
1-4.INSULATION RESISTANCE: 100MΩ MIN
1-5.DIELECTRIC WITHSTAND VOLTAGE,AC 100V FOR 1 MINUTE.
2.MECHANICAL PERFORMANCE,
2-1.INSERTION FORCE: 5~20N.
2-2.EXTRACTION FORCE: 8~20N.
2-3.DURABILITY: 10000 CYCLES.
3.ENVIRONMENTAL PERFORMANCE:
OPERATING TEMPERATURE: -25°C~+85°C.
4.IR REFLOW:
THE PEAK TEMPERATURE ON THE BOARD SHALL BE MAINTAINED FOR 10 SECONDS AT 260°C.
5.COMPLIANCE WITH ROHS REQUIREMENTS.
6.SALT SPRAY:24H
7. Meet ROHS & HF requirements
8.PART NUMBER CODE:

Z-CM026 S L B 0 2 R - A - 02
(1)(2)(3)

(1) HOUSING COLOR:
B:BLACK
(2) CONTACTS PLATED:
02:接触区镀金3u"，焊接区镀锡80u"MIN
(3) PACKING OPTIONS:
R:TAPE & REEL
VR:TAPE & REEL+Vacuum packaging（专用客户指定包装）

TABLE:

NO	PART	Q'TY	Material
1	SHELL	1	STAINLESS STEEL SUS304 T=0.15MM, Ni 30u" MIN. UNDER PLATED OVER ALL.
2	EMI	2	STAINIESS STEEL SUS301T=0.10MM,CLEAR ONLY
3	LATCH	1	STAINIESS STEEL SUS301 T=0.30MM,Ni 50u" MIN. UNDER PLATED OVER ALL. 80u" MIN. TIN PLATED ON SOLDER AREA.
4	CONTACT	24	COPPER STEEL C7025,Au(PART NUMBER CODE) plated on contact area Matte Tin plated 80u"min on solder area; Nickel 50u"min underplating over all.
5	HOUSING	1	LCP BLACK UL94 V-0
6	CAP	1	LCP BLACK UL94 V-0

PART NO.:
SEE THE PART NUMBER CODE

GENERAL TOLERANCES	
x.xxxx	± ---
x.xxx	± 0.10
x.xx	± 0.25
x.x	± 0.30
ANGULAR	± --°

QUALITY SYMBOL C = 0

深圳市中科兴达科技有限公司
SHENZHEN ZDT TECHNOLOGY CO.,LTD

TITLE
USB TYPE-C 24P MALE Vertical H=11.1

THIRD ANGLE PROJECTION	UNIT	SCALE	SHEET NO.
	mm	1:1	1 OF 2

DRAWN BY: SAM
CHECKED BY: JAY
APPROVED BY: JACKY
DWG.NO. CM026-02

frame size: A4

RoHS Compliant

THIS DRAWING CONTAINS INFORMATION THAT IS PROPRIETARY TO ZDT TECHNOLOGY. AND SHOULD NOT BE USED WITHOUT WRITTEN PERMISSION

TYPE C协会认证TID NO. 2753

REV	ECN No.	DATE	REMARK
A	NEW	2022.07.11	NEW RELEASE
B	ECN202303004	2023.03.13	盖子过炉后松脱，干涉由0.2改为0.4
C	ECR230916-004	2023.09.16	修正图纸规格描述

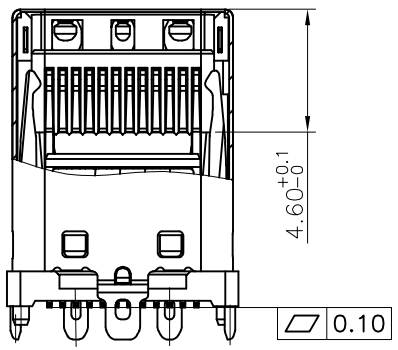

SECTION:A–A

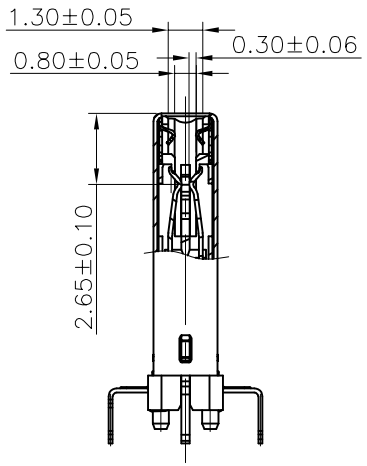

SECTION:B–B

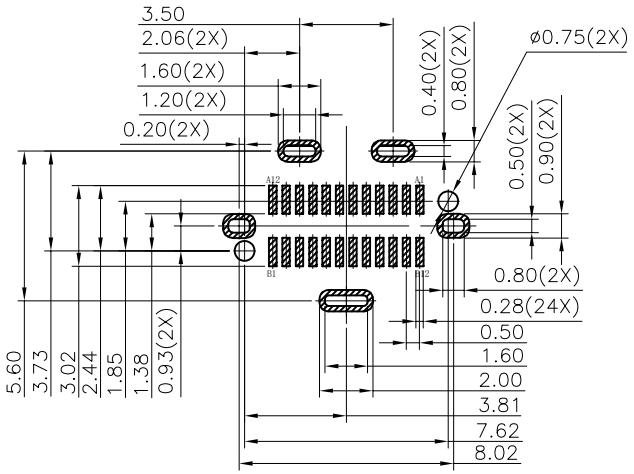

RECOMMENDED PCB LAYOUT(TOP VIEW)

THICKNESS 0.8±0.10MM;DEFAULT TOLERANCE:±0.05

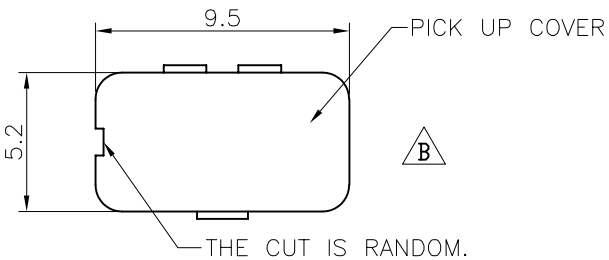

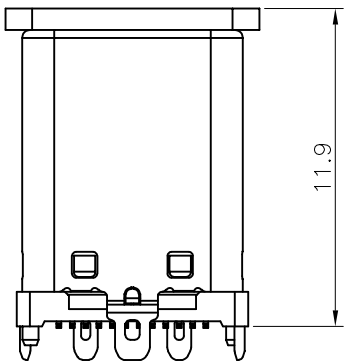

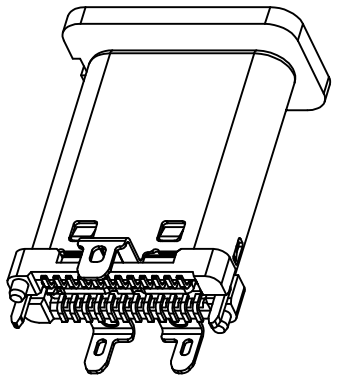

AFTER WITH PICKUP COVER

USB TYPE–C PIN ASSIGNMENTS

PIN NUMBER	SIGNAL NAME	PIN NUMBER	SIGNAL NAME
A1	GND	B12	GND
A2	SSTXp1	B11	SSRXp1
A3	SSTXn1	B10	SSRXn1
A4	VBUS	B9	VBUS
A5	CC1	B8	SBU2
A6	Dp1	B7	Dn2
A7	Dn1	B6	Dp2
A8	SBU1	B5	CC2
A9	VBUS	B4	VBUS
A10	SSRXn2	B3	SSTXn2
A11	SSRXp2	B2	SSTXp2
A12	GND	B1	GND

PART NO.: SEE THE PART NUMBER CODE

QUALITY SYMBOL

GENERAL TOLERANCES	
x.xxxx	± ---
x.xxx	± 0.10
x.xx	± 0.25
x.x	± 0.30
ANGULAR	± ––°

深圳市中科兴达科技有限公司
SHENZHEN ZDT TECHNOLOGY CO.,LTD

TITLE: USB TYPE–C 24P MALE Vertical H=11.1

THIRD ANGLE PROJECTION | UNIT: mm | SCALE: 1:1 | SHEET NO.: 2 OF 2

DRAWN BY: SAM
CHECKED BY: JAY
APPROVED BY: JACKY
DWG.NO. CM026-02

frame size: A4

RoHS Compliant

THIS DRAWING CONTAINS INFORMATION THAT IS PROPRIETARY TO ZDT TECHNOLOGY. AND SHOULD NOT BE USED WITHOUT WRITTEN PERMISSION

REV	ECN No.	DATE	REMARK
A	NEW	2020.10.10	NEW RELEASE

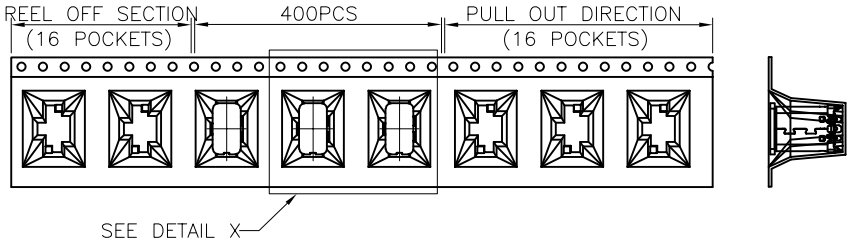

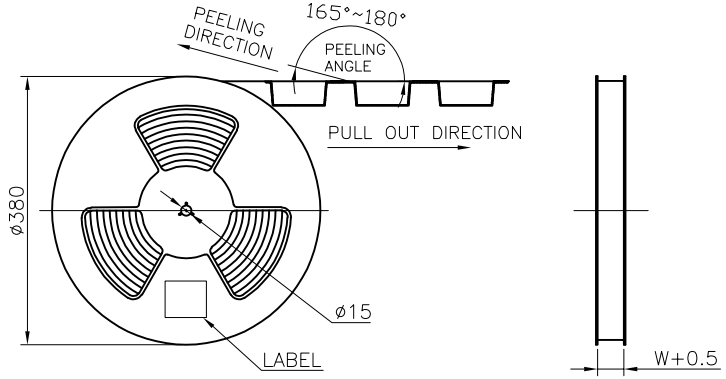

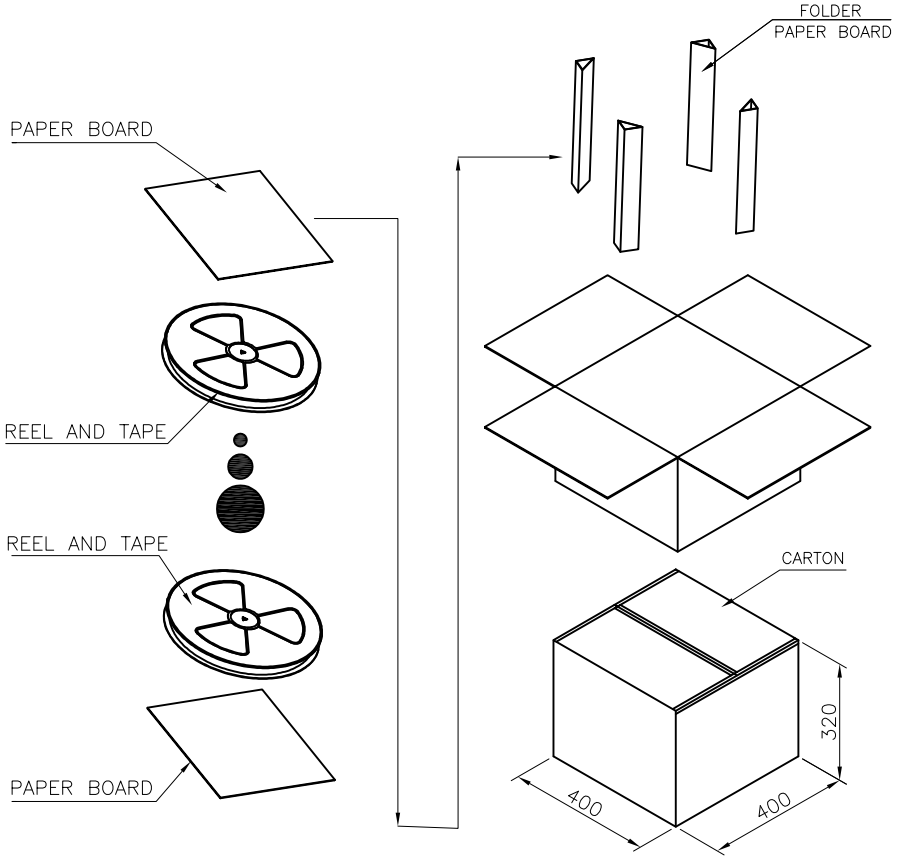

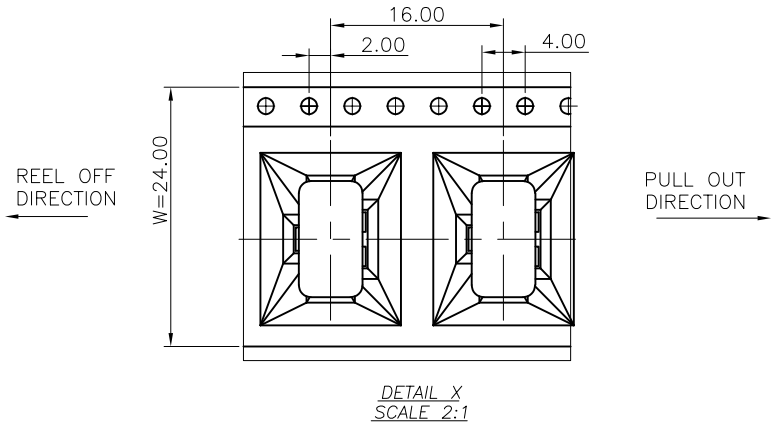

	REEL/TRAY	CARTON
CONNECTOR (PCS)	400	4000

PART NO.:
SEE THE PART NUMBER CODE

深圳市中科兴达科技有限公司
SHENZHEN ZDT TECHNOLOGY CO., LTD

QUALITY SYMBOL	GENERAL TOLERANCES (UNLESS SPECIFIED)
▽	x.xxxx ± ---
▽▽	x.xxx ± 0.10
▽▽▽	x.xx ± 0.25
▶	x.x ± 0.30
	ANGULAR ± ---

TITLE: TYPE C公头直立式三支脚—普通款包规

DWG.NO.: PK-CM026-02

SHEET NO.: 1 OF 1

DIMENSION STYLE: MM ONLY

DESIGN UNITS: METRIC

SCALE: 1:1

	DATE
DRAWN BY: SAM	2020.10.10
CHECKED BY: JAY	2020.10.10
APPROVED BY: JACKY	2020.10.10

THIRD ANGLE PROJECTION

frame size: A4