RoHS Compliant Pb

THIS DRAWING CONTAINS INFORMATION THAT IS PROPRIETARY TO ZDT TECHNOLOGY. AND SHOULD NOT BE USED WITHOUT WRITTEN PERMISSION

TID NO. 10017

REV	ECN No.	DATE	REMARK
A	NEW	2023.04.12	NEW RELEASE
B	---	2023.06.26	新增不带LOGO规格
C	---	2023.09.25	整理图纸

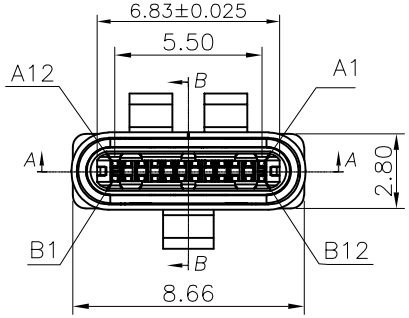

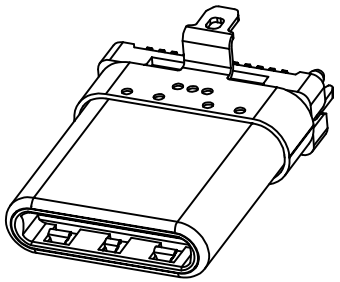

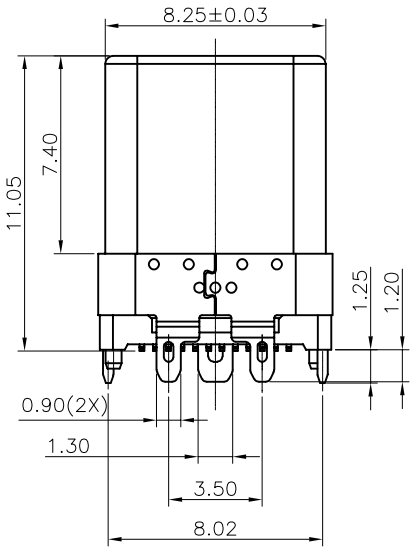

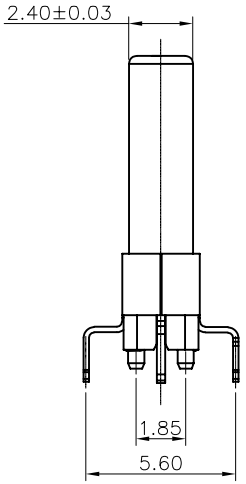

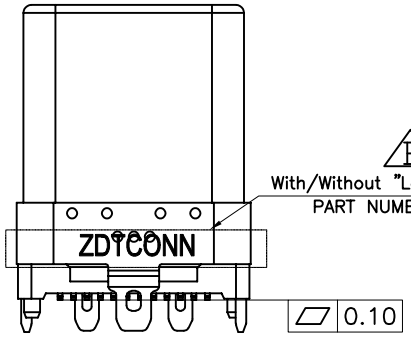

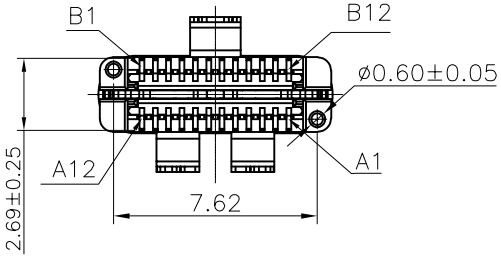

NOTE:
1.ELECTRICAL PERFORMANCE,
1-1. CURRENT RATING:5 AMPS. FOR TOTAL VBUS/GND PINS;
1.25AMPS FOR CC PIN,0.25 AMPS. FOR ALL OTHER CONTACT.
1-2. VOLTAGE RATING:5V/20V DC/AC (RMS. MAX)
1-3. LLCR:.
VBUS & GND PINS AND OTHER PINS: 40MΩ/PIN MAX.
SHIELD:50MΩ/MAX.
LLCR MAX. CHANGE OF ALL PINS: 10MΩ.
1-4.INSULATION RESISTANCE: 100MΩ MIN
1-5.DIELECTRIC WITHSTAND VOLTAGE,AC 100V FOR 1 MINUTE.
2.MECHANICAL PERFORMANCE,
2-1.INSERTION FORCE: 5~20N.
2-2.EXTRACTION FORCE: 8~20N.
2-3.DURABILITY: 10000 CYCLES.
C 3.ENVIRONMENTAL PERFORMANCE:
OPERATING TEMPERATURE: -25°C~+85°C.
4.IR REFLOW:
THE PEAK TEMPERATURE ON THE BOARD SHALL BE MAINTAINED FOR 10 SECONDS AT 260°C.
5.COMPLIANCE WITH ROHS&HF REQUIREMENTS.
6.PART NUMBER CODE:

CM 24 011 S L B 02 R - X
(1) (2) (3) (4) (5) (6)

(1) Pin No.:
24:24Pin
(2) HOUSING MATERIALS:
L:LCP
(3) HOUSING COLOR:
B:BLACK
(4) CONTACTS PLATED:
02:半金锡3u
(5) PACKING OPTIONS
R:TAPE & REEL
(6) SHEEL LOGO Option:
无:外壳带ZDT LOGO
1:外壳无ZDT LOGO

C

TABLE:

ITEM	NAME	QTY.	MATERIAL	DESCRIPTION
7	CAP	1	LCP UL94V-0	Color: Black
6	Back Shell	1	Stainless Steel SUS304 T=0.20	NICKEL 30U" MIN PLATED
5	Housing	4	LCP UL94V-0	Color: Black
4	Latch	1	Stainless Steel SUS301 T=0.30	Tin plated 80u"min on solder area; Nickel 50u"min underplating over all.
3	Contact	24	Copper Alloy C7025 T=0.15	3u"gold plated on Contact area, Matte Tin plated on Soldertails, Nickel underplating over all
2	Emc Spring	2	Stainless Steel SUS304 T=0.10	———
1	Front Shell	1	Stainless Steel SUS316L T=0.15	NICKEL 30U" MIN PLATED

PART NO.: SEE THE PART NUMBER CODE

深圳市中科兴达科技有限公司
SHENZHEN ZDT TECHNOLOGY CO.,LTD

GENERAL TOLERANCES	
x.xxxx	± ---
x.xxx	± 0.10
x.xx	± 0.25
x.x	± 0.30
ANGULAR	± ——°

QUALITY SYMBOL: C = 0, = 0

TITLE: USB TYPE-C PLUG 24PIN VERTICAL, SMT H=11.1cm, SOLDER TAB=1.25mm(02)

THIRD ANGLE PROJECTION | UNIT: mm | SCALE: 1:1 | SHEET NO.: 1 OF 2

DRAWN BY: SAM
CHECKED BY: JAY
APPROVED BY: JACKY
DWG.NO. CM24011SLB02R-02

frame size: A4

RoHS Compliant

THIS DRAWING CONTAINS INFORMATION THAT IS PROPRIETARY TO ZDT TECHNOLOGY. AND SHOULD NOT BE USED WITHOUT WRITTEN PERMISSION

TID NO. 10017

REV	ECN No.	DATE	REMARK
A	NEW	2023.04.12	NEW RELEASE
B	---	2023.06.26	新增不带LOGO规格
C	---	2023.09.25	整理图纸

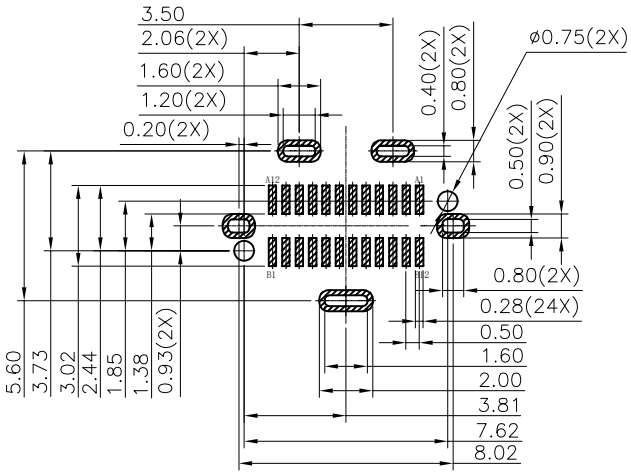

RECOMMENDED PCB LAYOUT(TOP VIEW)

THICKNESS 0.8±0.10MM;DEFAULT TOLERANCE:±0.05

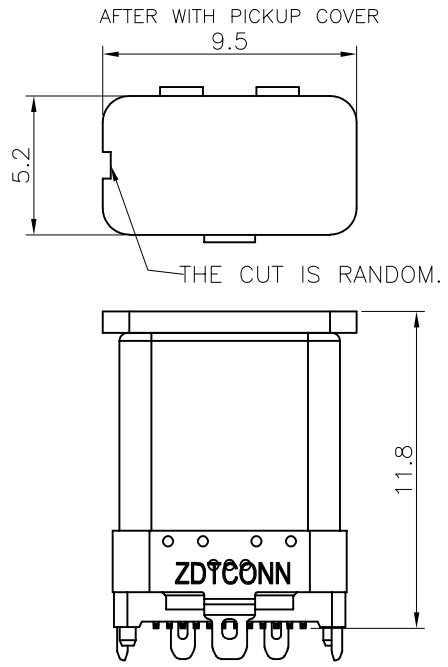

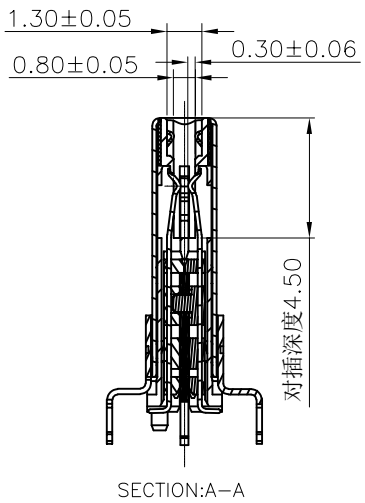

SECTION:A–A

USB TYPE–C PIN ASSIGNMENTS

PIN NUMBER	SIGNAL NAME	PIN NUMBER	SIGNAL NAME
A1	GND	B12	GND
A2	SSTXp1	B11	SSRXp1
A3	SSTXn1	B10	SSRXn1
A4	VBUS	B9	VBUS
A5	CC1	B8	SBU2
A6	Dp1	B7	Dn2
A7	Dn1	B6	Dp2
A8	SBU1	B5	CC2
A9	VBUS	B4	VBUS
A10	SSRXn2	B3	SSTXn2
A11	SSRXp2	B2	SSTXp2
A12	GND	B1	GND

PART NO.: SEE THE PART NUMBER CODE

QUALITY SYMBOL: C = 0, ▶ = 0

GENERAL TOLERANCES	
x.xxxx	± ---
x.xxx	± 0.10
x.xx	± 0.25
x.x	± 0.30
ANGULAR	± --°

ZDT 深圳市中科兴达科技有限公司 SHENZHEN ZDT TECHNOLOGY CO., LTD

TITLE: USB TYPE–C PLUG 24PIN VERTICAL, SMT H=11.1cm, SOLDER TAB=1.25mm(02)

THIRD ANGLE PROJECTION	UNIT	SCALE	SHEET NO.
	mm	1:1	2 OF 2

DRAWN BY: SAM

CHECKED BY: JAY

APPROVED BY: JACKY

DWG.NO. CM24011SLB02R-02

frame size: A4

RoHS Compliant

THIS DRAWING CONTAINS INFORMATION THAT IS PROPRIETARY TO ZDT TECHNOLOGY. AND SHOULD NOT BE USED WITHOUT WRITTEN PERMISSION

REV	ECN No.	DATE	REMARK
A	NEW	2023.04.02	NEW RELEASE

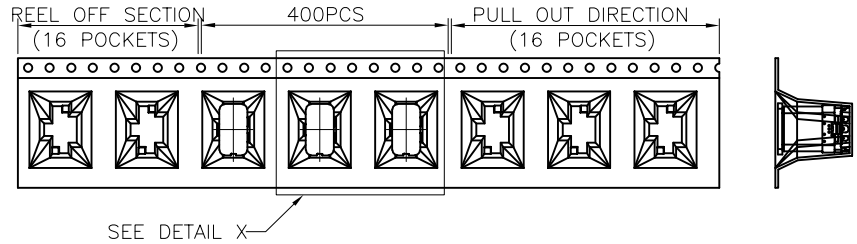

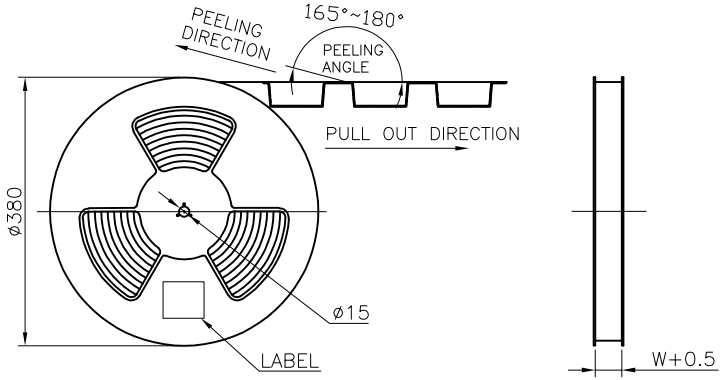

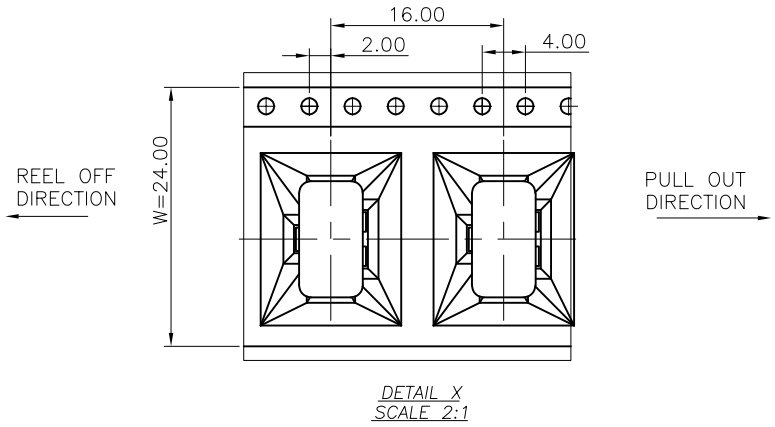

DETAIL X
SCALE 2:1

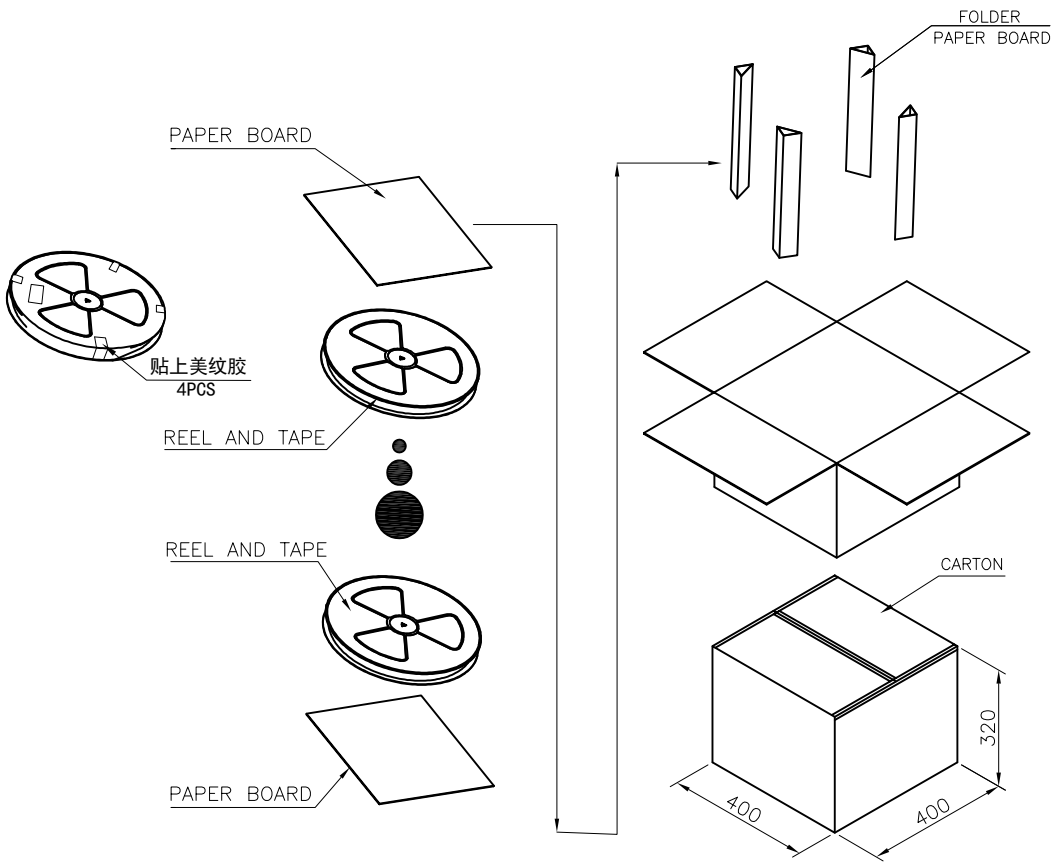

	REEL/TRAY	CARTON
CONNECTOR (PCS)	400	4000

备 注:

1. 每盘装400PCS,并贴上4PCS美纹胶,然后贴上对应的产品标签。
2. 外箱底部先垫一隔板,并在外箱四个内角各放置一个三角架,
把10卷(4000PCS)封装好的产品标签一律朝上平放进外箱中
上层盖上一隔板, 再用封箱胶纸将外箱口於“工”字型封好.

PART NO.:
SEE THE PART NUMBER CODE

QUALITY SYMBOL	GENERAL TOLERANCES (UNLESS SPECIFIED)	
▽	x.xxxx	± ---
▽▽	x.xxx	± 0.10
▽▽▽	x.xx	± 0.25
▽▽▽▽	x.x	± 0.30
	ANGULAR	± ---

深圳市中科兴达科技有限公司
SHENZHEN ZDT TECHNOLOGY CO., LTD

TITLE: CM 24P拉伸壳直立式11.05—普通款包规

DWG.NO.: PK-CM24011SLB02R-02

SHEET NO.: 1 OF 1

DIMENSION STYLE: MM ONLY

DESIGN UNITS: METRIC

SCALE: 1:1

DRAWN BY	SAM	DATE 2023.04.02
CHECKED BY	JAY	DATE 2023.04.02
APPROVED BY	JACKY	DATE 2023.04.02

THIRD ANGLE PROJECTION

frame size: A4