REV	ECN No.	DATE	REMARK
A	NEW	2022.03.28	NEW RELEASE
A	-----	2025.06.11	EMI 材质变更为SUS316

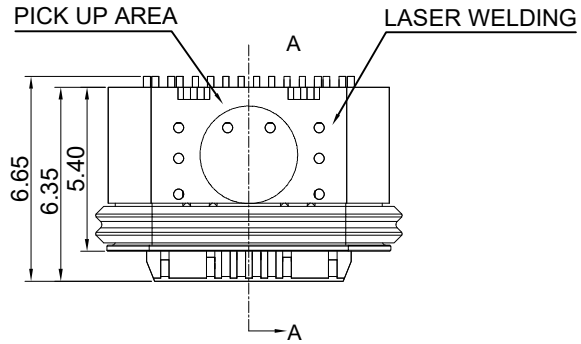

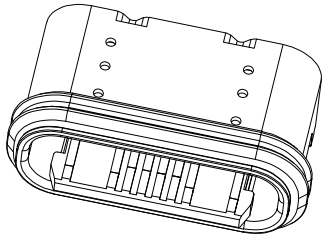

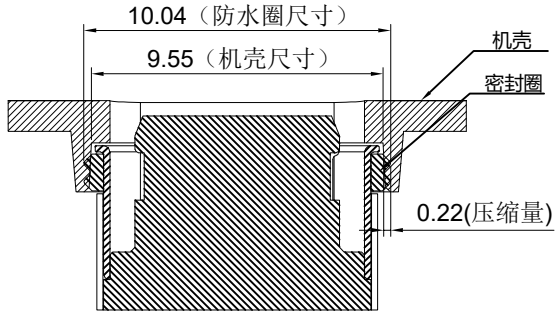

ASSEMBLY DIAGRAM

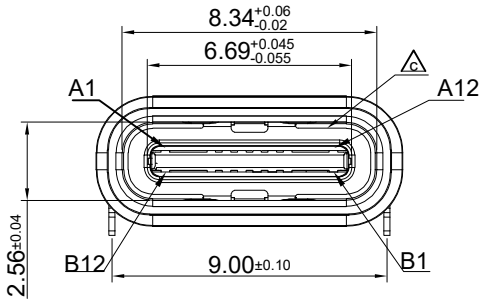

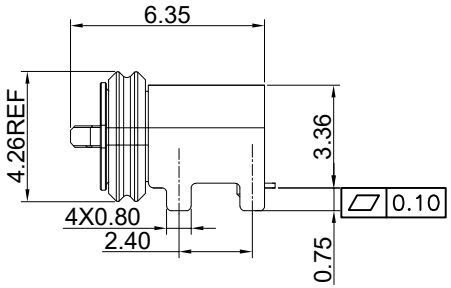

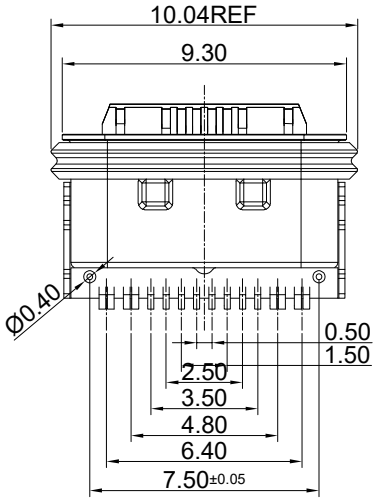

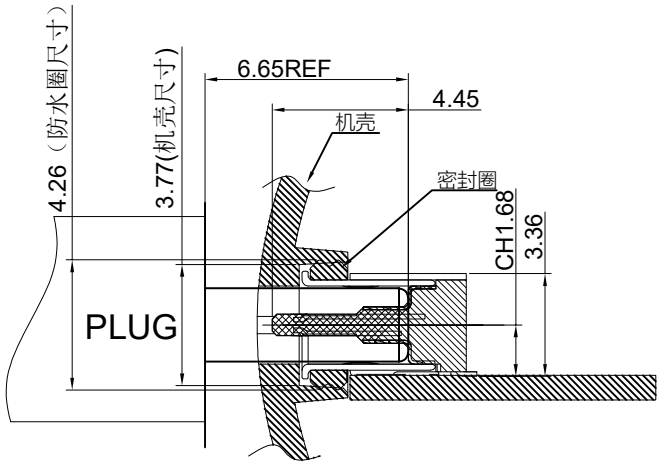

RECOMMENDED ASSEMBLY DRAWING

TABLE:

NO.	PARTS	MATERIAL	REMARKS
1	SHELL	STAINLESS STEEL	SUS304 Ni PLATED
2	MID PLATE	STAINLESS STEEL	SUS304 NO PLATED
3	EMI	STAINLESS STEEL	SUS316 NO PLATED
4	HOUSING	HIGH TEMPERATURE PLASTIC	PA9T BLACK UL 94 V-0
5	CONTACT	COPPER ALLOY(C7025)	Au Plated On Vontact Area GF Plated On Solder Area; Nickel 50u"Min Underplating Over All.
6	WATERPROOF RING	SILICA GEL	/
7	GLUE	SL407	/

GENERAL TOLERANCES (UNLESS SPECIFIED)		DRAWN BY: HuangXiaoHao	Date: 2025.06.11	深圳市中科兴达科技有限公司 Shenzhen Zhongke Xingda Technological Co;Ltd.	
X.XXX	±0.10	CHECKED BY: liuzongliang	Date: 2025.06.11	TITLE: USB TYPE-C 16PIN SMT板上防水IPX5 L=5.37	
X.XX	±0.15				
X.X	±0.20	APPROVED BY: Jacky	Date: 2025.06.11	PART NO. CFW16-042SLB11R-22	DWG NO. CFW16-041-22
ANGULAR	±3°				
THIRD ANGLE PROJECTION		UNT mm	SCALE 1:1	DRAWING A4	SHEET NO. 1 OF 2 / REV. B

REV	ECN No.	DATE	REMARK
A	NEW	2023.11.16	NEW RELEASE
B	----	2025.06.11	EMI 材质变更为SUS316

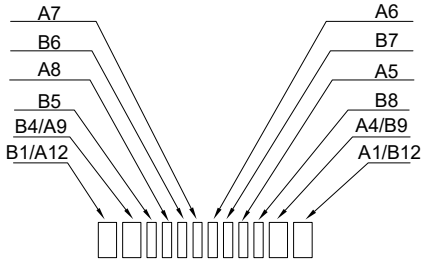

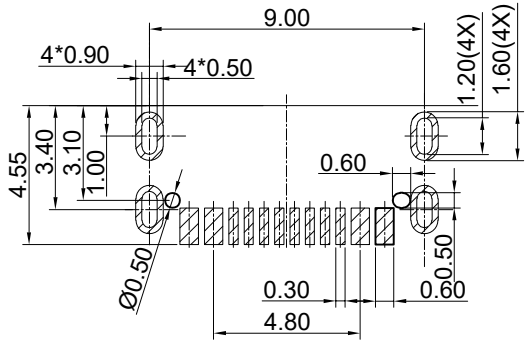

RECOMMENDED PCB LAYOUT
TOLERANCE:±0.05

USB Type-C Pin Assignments

Pin Number	Signal Name	Pin Number	Signal Name
A1	GND	B12	GND
---	---	---	---
---	---	---	---
A4	VBUS	B9	VBUS
A5	CC1	B8	SBU2
A6	Dp1	B7	Dn2
A7	Dn1	B6	Dp2
A8	SBU1	B5	CC2
A9	VBUS	B4	VBUS
---	---	---	---
---	---	---	---
A12	GND	B1	GND

Specification:
1.Current Rating: 5.0 A
2.Voltage Rating: 5.0 V
3.Vbus & Gnd Pins And Other Pins: 40mΩ/pin Max
Shield: 50mΩ/Max
Llcr max. Change of All Pins: 10Ωm
4.Insulation Resistance: 100mΩ Min
5.Dielectric Withstand Voltage,AC 100V For 1Minute
6.Insertion Force: 0.5~2.0kgf
7.Unmating Force: 0.8-2.0kgf
8.Durability: 10000 Cycles
9.Operating Temperature: -25°C~+85°C
10.The Peak Temperature on The Boaro Shall Be Maintained For 10 Seconds At 260°C
11.Waterproof: IPX5

Ordering Information:

CF W 16 - 041 S L B 11 R - 22
1 2 3 4 5

1.Product Type:
W:Waterproof
2.Pin No.:
16:16Pin
3.Housing Color:
B:Black
4.Contacts Plated:
11:Contact Area: Au 1u",Solder Tails:GF
5.Packing Options:
R:Tape & Teel

GENERAL TOLERANCES (UNLESS SPECIFIED)		DRAWN BY: HuangXiaoHao	Date: 2025.06.11	深圳市中科兴达科技有限公司 Shenzhen Zhongke Xingda Technological Co;Ltd.	
X.XXX	±0.10	CHECKED BY: liuzongliang	Date: 2025.06.11	TITLE: USB TYPE-C 16PIN SMT板上防水IPX5 L=5.37	
X.XX	±0.15				
X.X	±0.20	APPROVED BY: Jacky	Date: 2025.06.11	PART NO.: CFW16-042SLB11R-22	DWG NO.: CFW16-041-22
ANGULAR	±3°				
THIRD ANGLE PROJECTION		UNT: mm	SCALE: 1:1	DRAWING: A4	SHEET NO.: 2 OF 2 / REV.: B

REV	ECN No.	DATE	REMARK
A	NEW	2022.03.28	NEW RELEASE

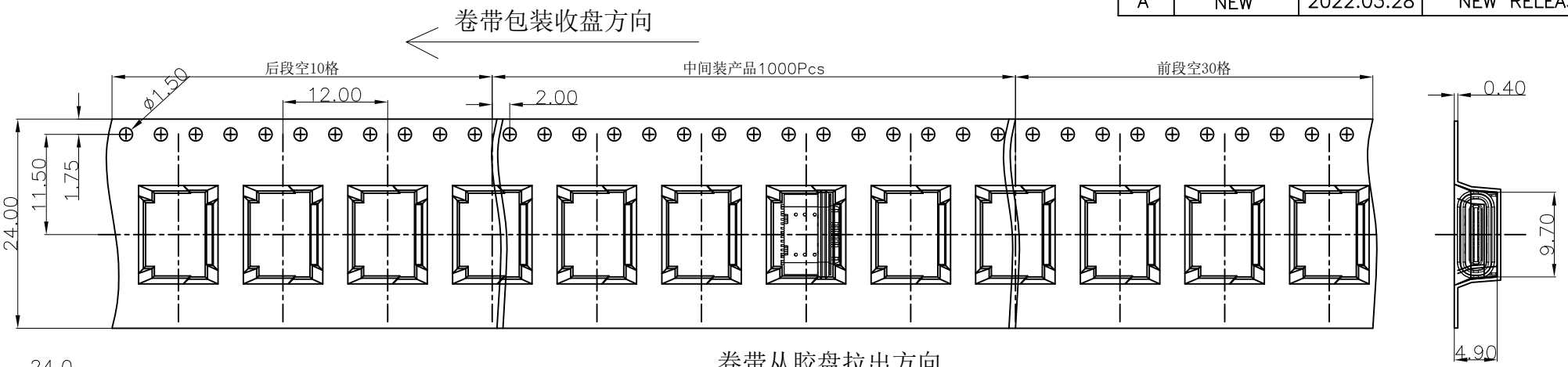

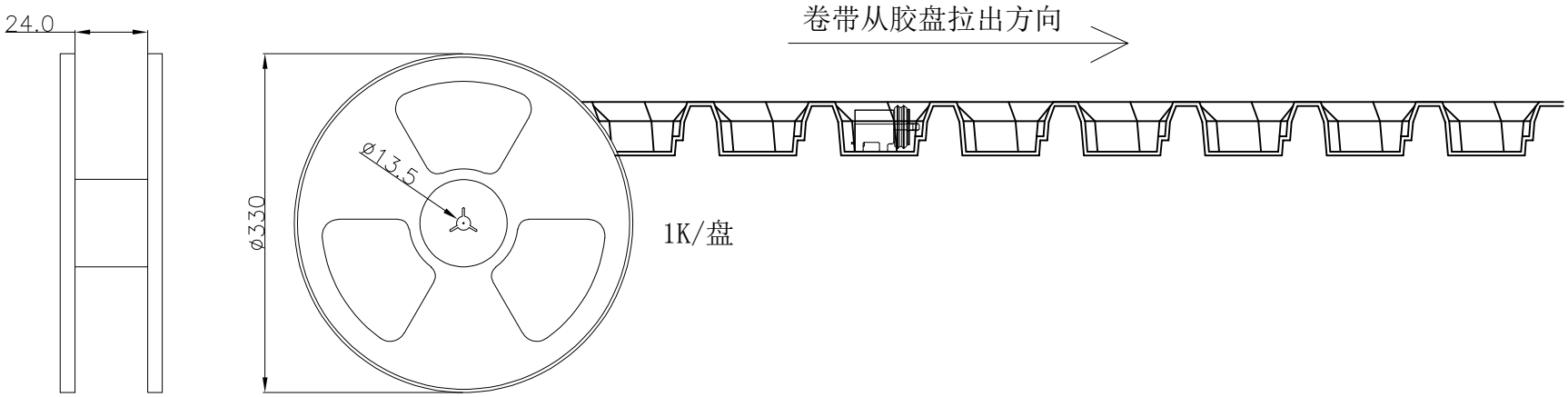

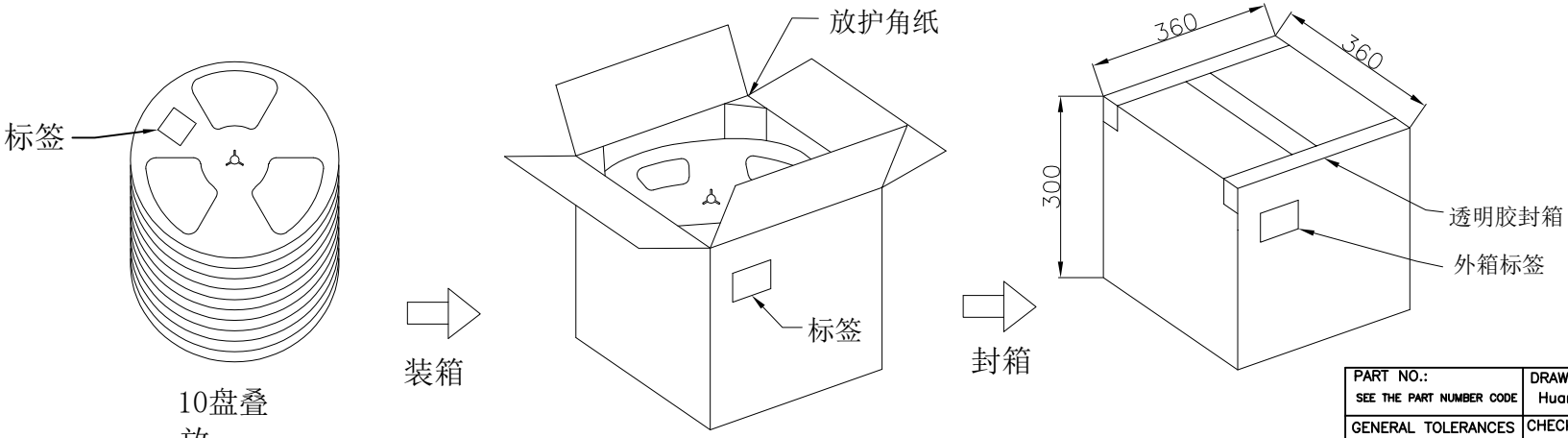

说明：
所有包材均符合ROHS 2.0环保标准.
1.材质与数量
1.1 上带材质:PS 透明 13.3M/卷
1.2 截带材质:PS 透明 13.3M/卷
1.3 胶盘材质:PS 蓝色 7PCS/箱
1.4 纸箱材质:纸板 A=A加强芯 1PCS/箱
1.5 护角材质:纸板 A=A加强芯 4PCS/箱
2.尺寸:如图所示
3.包装数量:1K/盘,7盘/箱.

PART NO.: SEE THE PART NUMBER CODE		DRAWN BY: HuangXiaoHao	深圳市中科兴达科技有限公司 SHENZHEN ZDT TECHNOLOGY CO.,LTD
GENERAL TOLERANCES		CHECKED BY: liuzongliang	TITLE: USB TYPE-C 16PIN SMT板上防水IPX5 L=5.37-包装规范
x.xxxx	± ---	APPROVED BY: Jacky	
x.xxx	± 0.10		
x.xx	± 0.15		
x.x	± 0.20	THIRD ANGLE PROJECTION	
ANGULAR	± 3°		

DIMENSIONS	SCALE	DRAWING	SHEET NO.	DWG.NO.
mm	1:1	A4	1 OF 1	PK-CFW16-041SLB-22