

3D VIEW

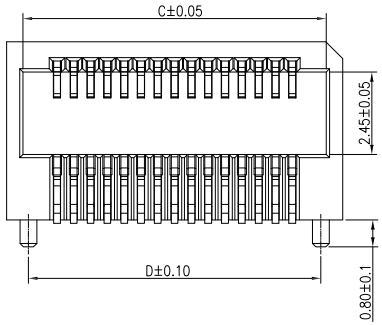

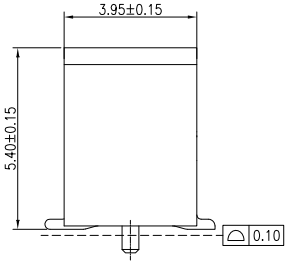

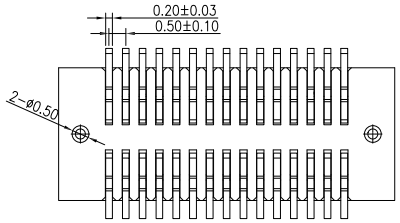

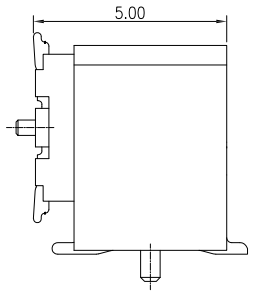

MATING HEIGHT:5.0mm

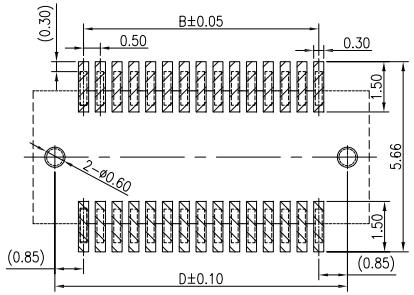

RECOMMENDED PCB PATTERN DIM.

TOLERANCE : ±0.05

NOTES:
1.HUOSING: LCP HIGH-TEMP THERMOPLASTIC UL94-0
COLOR:BEIGE.
2.TERMINAL: PHOSPHOR BRONZE PLATING: 1μ"GOLD FLASH
OVERALL 50~100μ"NICKEL UNDER PLATED.
3.VOLTAGE RATING: 60V AC/DC
4.CURRENT RATING: 0.5A MAX AC/DC
5.OPERATING TEMPERATURE: -25℃ TO +85℃
6.CONTACT RESISTANCE: 60mΩ MAX
7.INSULATION RESISTANCE: 800MΩ MIN

NO.of contacts	Dimensions			
	A.	B.	C.	D.
4	3.50	0.50	2.52	2.20
6	4.00	1.00	3.02	2.70
8	4.50	1.50	3.52	3.20
10	5.00	2.00	4.02	3.70
12	5.50	2.50	4.52	4.20
14	6.00	3.00	5.02	4.70
16	6.50	3.50	5.52	5.20
18	7.00	4.00	6.02	5.70
20	7.50	4.50	6.52	6.20
22	8.00	5.00	7.02	6.70
24	8.50	5.50	7.52	7.20
26	9.00	6.00	8.02	7.70
28	9.50	6.50	8.52	8.20
30	10.00	7.00	9.02	8.70
32	10.50	7.50	9.52	9.20
34	11.00	8.00	10.02	9.70
36	11.50	8.50	10.52	10.20
38	12.00	9.00	11.02	10.70
40	12.50	9.50	11.52	11.20
42	13.00	10.00	12.02	11.70
44	13.50	10.50	12.52	12.20
46	14.00	11.00	13.02	12.70
48	14.50	11.50	13.52	13.20
50	15.00	12.00	14.02	13.70
52	15.50	12.50	14.52	14.20
60	17.50	14.50	16.52	16.20
70	20.00	17.00	19.02	18.70
80	22.50	19.50	21.52	21.20

Ordering Information

HC-PBB 05 - * - N - * - * - H* - ** - R - P -06

PITCH 05=0.5mm 08=0.8mm; 1= 单槽 2= 双槽; No.of Pins (Unit:Ø) 04P~80P 04= 4Pin 06= 6Pin; Nature M=Male F=Female; 默认=直插 S=Side inserted TYPE (侧插); Plastic Height H5.4=5.4mm; Contact Plating G1:1u" Gold; R=Reel (Ø4/5); Post (Ø1/2)

			GENERL TOLERANCE		制 图 DRAWING		深圳市华灿天禄电子有限公司 ShenzhenhuacantianluELECTRONICS CO.,LTD			
			DIM	TOL	审 核 CHECK					
			X.X	±0.30	批 准 APPROVAL		产品名称 TITLE	BTB 0.5 单槽 母座 立式侧插 座高5.4mm 编带 带柱	版 本 REV.	A
1	初版发行		X.XX	±0.20	比 例 SCALE		产品料号 PART NO.	HC-PBB05-1-N-F-S-H5.4-XX-R-P-06	单 位 UNITS	mm
			X.XXX	±0.10						
序号 No.	变更内容 MODIFY CONTENT	日 期 MODIFY DATE	Angle	±3.0°	投 影 Projection		材 料 MATERIAL		页 次 SHEET	1/1