MBRF6045CT

Power Schottky Rectifier - 60Amp 45Volt

◆ Features:

- ✧ High switching frequency
  开关频率高
- ✧ Low forward voltage drop
  正向压降低
- ✧ High efficiency and low power loss
  高效低功耗
- ✧ High volume of current and good capability of surge current
  大电流浪涌能力强

RoHS COMPLIANT

TO-220F

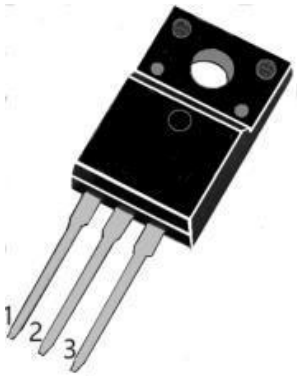

◆ Applications

- ✧ High frequency rectifier of switching mode power supplies
  高频整流器开关电源
- ✧ Freewheeling diodes
  续流二极管
- ✧ Polarity protection application
  极性保护应用
- ✧ DC-DC converters
  直流-直流变换器

PIN CONNECTIONS

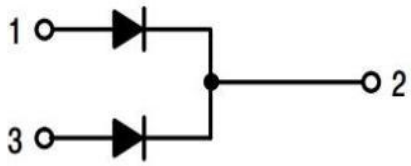

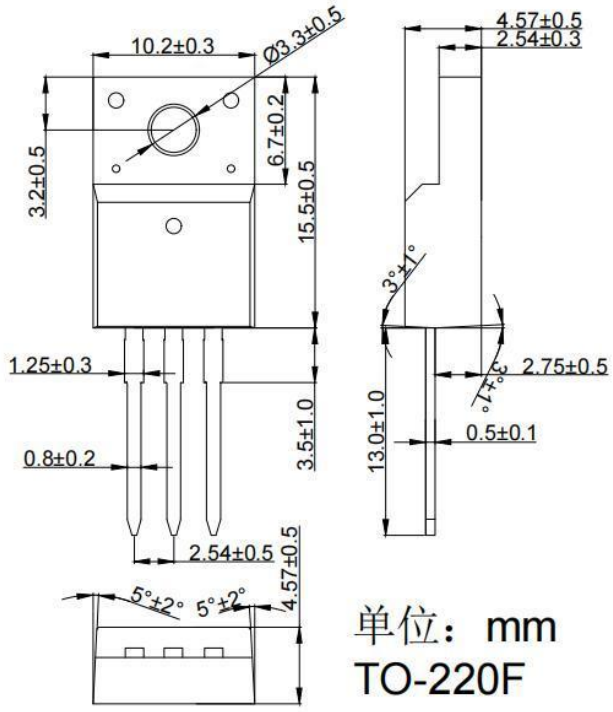

单位：mm

TO-220F

◆ Absolute Maximum Ratings (Tc=25°C)

Symbol	Parameters	Ratings	Unit
V_{RRM}	Repetitive Peak Reverse Voltage 最大反向重复峰值电压	**45**	V
V_{RWM}	Working peak reverse voltage 反向峰值工作电压	**45**	V
V_R	Maximum DC blocking voltage 最大直流反向电压	**45**	V
$I_{F(AV)}$	Maximum average forward rectified current Total device 最大正向平均电流	**60**	A
I_{FSM}	Peak Forward Surge Current 正向峰值浪涌电流	**350**	A
T_j	Operating junction temperature range 结温	**175**	℃
T_{stg}	Storage temperature range 贮存温度	**-55~175**	℃

◆ Electrical characteristics

Symbol	Parameters	Min	Typical	Max	Units	Conditions
I_R	Maximum Reverse Leakage Current （Note 1） 最大反向瞬态电流	--	--	**1**	uA	$V_R=V_{RRM}$ T_C = 25 °C
V_F	Maximum Instantaneous Forward Voltage（Note 2） 最大瞬态正向压降	--	**0.59**	--	V	I_F= 30 A，T_C = 25 °C
$R_{th(j-c)}$	Typical Thermal Resistance,Junction to Case 结到外壳的典型热阻	--	--	**2.0**	°C/W	
dV/dt	Voltage Rate of Change 电压变化率	--	--	**10000**	V/μs	

Note 1: 2.0uS Pulse Width, f=1.0KHz

Note 2: Pulse Test : 300us Pulse Width, 1% Duty Cycle