产 品 规 格 书
Product Specification

CUSTOMER	客户:	
CUSTOMER PN	客户 PN:	
HANG CRYSTAL P/N	杭晶物料编码:	**1532H-50.000EWVAZS**
MODEL	产品型号:	**Oscillator SMD 3.2x2.5, HCMOS, 1.8~3.3V**
NOMINAL FREQUENCY	频率:	**50.000MHz**
ISSUE DATE	日期:	**2022 / 06 / 07**

CUSTOMER'S APPROVAL

客户确认

(PLEASE RETURN A COPY WITH APPOVAL)
（请将确认的复印件返回我司）

APPROVED	QA
MB.	James J

SUZHOU HANGJING ELEC&TECH CO.,LTD
苏州杭晶电子科技有限公司
No. 207, Blk. B, Chenlei Science & Technology Park, No. 1, First Qunxing Road, Suzhou Industrial Park, Jiangsu, China
TEL.86 (0)512 65916689
FAX 86 (0)512 65918005

Revision	Description / ECN	Prepared	Approved	Date
1	Initial release	MB.	James Jiang	2022-06-07
2	Not issued			
3	Not issued			
4	Not issued			

1. MAXIMUM RATINGS, OPERATING AND STORAGE CONDITIONS

	PARAMETER	SYMB.	MIN	TYP	MAX	Unit	Conditions / Remarks
1	Maximum voltage range	V_{MAX}	–0.5		+4.5	V_{DC}	Between V_{CC} and GND
2	Nominal supply voltage	V_{CC}	1.62	1.80	3.63	V_{DC}	--
3	Output load capacitance	CL		15		pF	HCMOS
4	Operating temperature range	T_{OP}	–55	+25	+125	°C	--
5	Storage temperature range	T_{ST}	–55		125	°C	--
6	Enable / Disable function	E/D	Pin 1 = HIGH	→		Output pin 3 is enabled	
	(→ Output TRISTATE)	Note 1	Pin 1 = LOW	→		Output pin 3 is disabled (high impedance)	

Note 1: Output pin 3 is enabled when E/D input pin 1 is left open (floating).

2. ELECTRICAL PARAMETER LIMITS

	PARAMETER	SYMB.	MIN	TYP	MAX	Unit	Conditions / Remarks
1	Nominal frequency	F_N		**50.000**		MHz	--
2	Frequency tolerance	$\Delta f/F_N$	–20		+20	ppm	Offset from F_N at +25°C
3	Frequency stability (overall)	$\Delta f/F_N$	–70		+70	ppm	Note 1
4	Aging first year	$\Delta f/F_{A1}$	–3.0		+3.0	ppm	at +25°C
5	Output voltage level HIGH	V_{OH}	90%V_{CC}			V_{DC}	HCMOS level 90%V_{CC} MIN
6	Output voltage level LOW	V_{OL}			10%V_{CC}	V_{DC}	HCMOS level 10%V_{CC} MAX
7	Output amplitude rise time	t_R			5.0	ns	At 20~80%V_{CC} / 15pF / +25°C
8	Output amplitude fall time	t_F			5.0	ns	At 80~20%V_{CC} / 15pF / +25°C
9	Output amplitude symmetry	DC	45		55	%	At 50%V_{CC} / 15pF / +25°C
10	Current consumption	I_{CC}			10	mA	With output load CL ±10%
11	Standby current	I_{STB}			10	µA	Output disabled (pin 1 = LOW)
12	Startup time	t_{STRT}			5	ms	V_{P-P} reach >90% of amplitude

Note 1: Including tolerance at +25°C, deviations over operating temperature range, input voltage changes, output load changes, shock and vibration.

3. PRODUCT MARKING

1	**FF.fff**	Nominal frequency in MHz (three digits after decimal point)											
2	**HCI**	Company logo											
3	**Y**	Year code of manufacturing (see table below)											
	Year	2021	2022	2023	2024	2025	2026	2027	2028	2029	2030	2031	2032
	Code	V	W	X	Y	Z	A	B	C	D	E	F	G
4	**M**	Month code of manufacturing (see table below)											
	Month	Jan	Feb	Mar	Apr	May	Jun	Jul	Aug	Sep	Oct	Nov	Dec
	Code	A	B	C	D	E	F	G	H	J	K	L	M



OUTLINE DRAWING

	Package descriptions	Package model	Remarks
1	Ceramic seam seal SMD package 3.2x2.5mm with 4 pads for Oscillator	3225p4 h12	With E/D function on pin 1

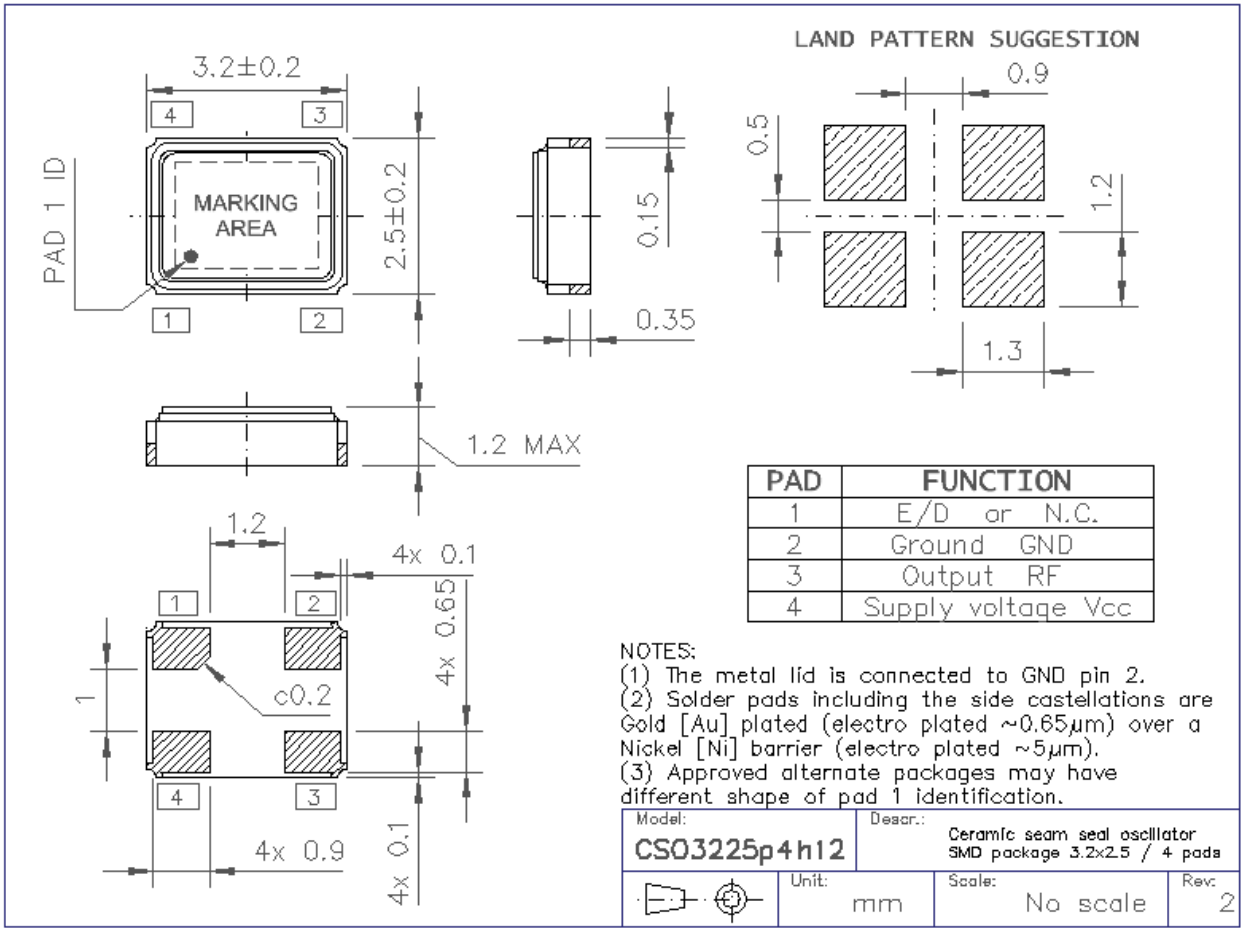

4. RELIABILITY TEST INFORMATION

	Test item	Test method	Criteria
1	Temperature Cycle (GB/T2423.22-2002, Method Nb)	10 cycles from -55°C to +125°C. Tested after 24±2h at room temperature.	±5.0ppm
2	Low Temperature Storage (GB/T 2423.1-2001, Method Aa)	72h at -55°C±3°C constant temperature. Tested after 24±2h at room temperature.	±5.0ppm
3	High Temperature Storage(GB/T 2423.2-2001, Method Ba)	72h at +125°C±3°C constant temperature. Tested after 24±2h at room temperature.	±5.0ppm
4	Humidity (GB/T 2423.3-2006, Method Cab)	96h at +40 °C ± 3 °C, with 90± 3% RH. Tested after 24±2h at room temperature.	±5.0ppm
5	Vibration (GB/T 2423.10-1995, Method Fc)	Apply 0.75mm vibration at frequency 10～500 Hz, for 2h. 10 cycles in each direction of 3 axis, test after 1h.	±5.0ppm
6	Shock (GB/T 2423.5-1995,Method Ea)	Peak 1000m/s^2, with 6ms half sine wave, 3.7m/s, in 3 perpendicular axis, 3 cycles /direction, test after 1h.	±5.0ppm
7	Drop (GB/T 2423.8-1995, M. Ed)	Free drop onto wooden plate from 1.0 m height for 3times.	±5.0ppm
8	Solderability (GB/T2423.28-2005, Method Tc)	Dip into 245 ± 5℃ solder bath for 2 ± 0.5 seconds. Inspection under 8-12X magnifier.	>95% cover.
9	Terminal Strength (JIS-C-6429 Method 1 & 2)	Mount on a glass-epoxy board (100x50x1.6mm), then bend to 2mm displacement (velocity 1mm/sec) and keep for 5 seconds. or pulling force 0.5 kg for at least 60seconds	No damage
10	Resistance to Solder Heat (GB/T 2423.28-2005,Test Tb Meth. 1B)	Reflow at Preheat to 150°C±5°C for 60 to 120sec,and peak 265°C±5°C for 10s±3sec, Tested after 24±2h at room temp.	±5.0ppm

5. ENVIRONMENTAL COMPLIANCE INFORMATION

		Compliance information
1	RoHS	This product is fully RoHS compliant, 6/6 compliant per EU legislation.
2	RoHS 2	This product is RoHS compliant per DIRECTIVE 2015/863 (also called RoHS10). In regards of CE marking directive for finished products, we can provide RoHS test reports and MDS to show compliance, but since our product is not a final application we have no CE mark.
3	Lead-Free	This product is considered Lead-Free, Lead (Pb) contamination is controlled to be below 200ppm.
4	Halogen-Free	This product is compliant to IEC 61249-2-21:2003 (Br<800ppm / Cl<800ppm).
5	REACH (SVHC)	This product does not contain substances (SVHC) listed by REACH, we continuously monitor updates of the list of SVHC's
6	PFOS / PFOA Free	This product is free of any PFOS / PFOA.
7	Electrostatic Discharge (ESD) sensitivity	This product is ESD sensitive and requires precautions for handling and storage. Follow JEITA EIAJ ED-4701 or JSD22 or ANSI-ESD-S20-20 or IEC 61000-4-2.
8	Moisture Sensitivity	This product is hermetically sealed and does NOT fall under the classification of moisture sensitivity per J-STD-020C (Standard is for non-hermetically sealed components). If required we suggest to use LEVEL 1

6. RECOMMENDED SOLDERING INFORMATION

RECOMMENDED REFLOW SOLDER PROFILE – PEAK TEMPERATURE UP TO +260°C

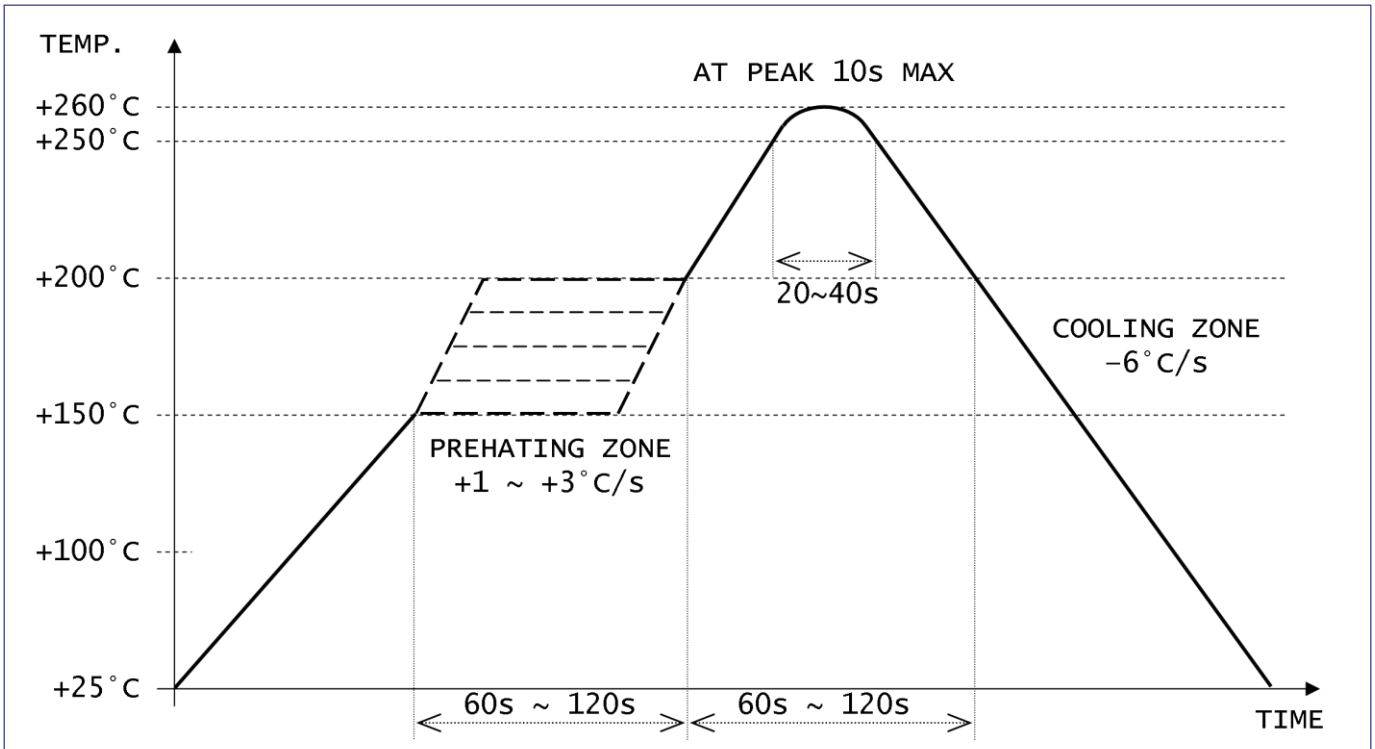

- Preheating at 150~180°C recommended.
- Peak temperature shall kept within ±5°C.
- For other procedures refer to IEC 60068-2-20.

MANUAL SOLDERING USING SOLDER IRON:
- Maintain solder bit temperature at +350±10°C.
- Application time shall be kept 3±1s or lesser.

DWG_ReflowProfile_260 HCI QE 2014/10 NO SCALE Rev.: 1

7. PACKAGING

Carrier

	Parameter	STANDARD PACKAGING	ALTERNATE PACKAGING
1	A0	2.8±0.1	
2	B0	3.6±0.1	
3	K0	1.25±0.1	
4	B1	4.2±0.1	
5	P0	4.0±0.1	
6	P1	4.0±0.1	
7	T	0.3±0.05	
8	W	8.0±0.2	

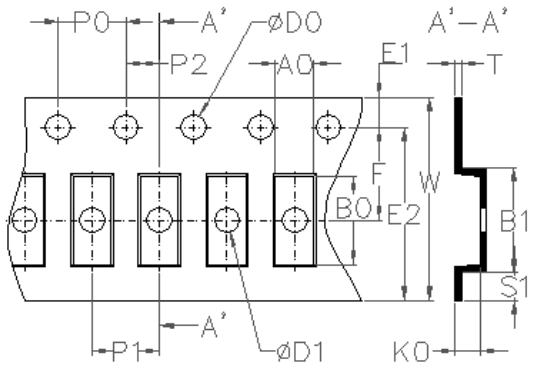

Note 1: All dimensions in [mm].
Note 2: All dimensions not specified or not being shown follow EIA-481 standard.

Reel

QTY per reel: 3,000pcs MAX

	Parameter	STANDARD PACKAGING	ALTERNATE PACKAGING
9	A	$178^{+0}_{-1.5}$	$180^{+0}_{-1.5}$
10	B	2.0±0.5	2.0±0.5
11	ØC	13.2±0.2	13.2±0.2
12	ØD	21±0.8	21±0.8
13	N	62±2	62±2
14	W1	$8.0^{+2.0}_{-0}$	$8.0^{+2.0}_{-0}$
15	W2	$11.4^{+2.0}_{-0}$	$11.4^{+2.0}_{-0}$

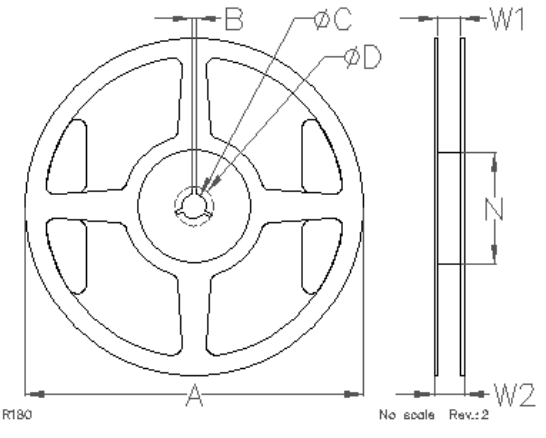

Note 1: All dimensions in [mm]. Dimension W1 is measured near the Hub (N).
Note 2: All dimensions not specified or not being shown follow EIA-481 standard.

Unreeling information

	Oscillator product's orientation
16	This product is a polarized component which requires a certain orientation; Pin 1 is identified on top side marking with a DOT. In the carrier tape is the component oriented with pin 1 towards the sprocket holes. (per EIA-481)

