Hang Crystal International

TEMPERATURE COMPENSATED CRYSTAL OSCILLATOR
8122S

TCXO UNIT WITH CLIPPED SINE WAVE OUTPUT IN SMD 2.5X2.0MM CERAMIC SEAM SEAL PACKAGE.

PRODUCT FEATURES

- Small dimensions 2.5x2.0x0.9 with 4 solder pads.
- Tight stabilities over temperature range.
- RoHS compliant, LEAD-FREE, HALOGEN-FREE and REACH compliant.

PRODUCT PHOTO (NOT IN SCALE)

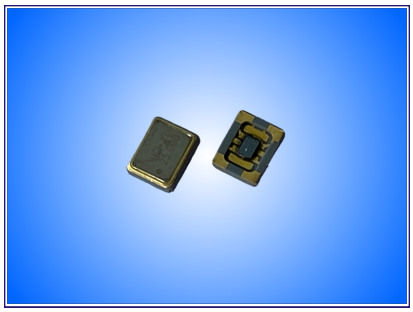

APPLICATIONS

- WiMAX / WLAN / Ethernet
- Mobil applications
- Telecommunication

PRODUCT SPECIFICATIONS

PARAMETER	SUPPLY VOLTAGE 1.8V | 2.5V | 2.8/ 3.0/ 3.3V	REMARKS
Frequency range	10 ~ 52MHz	--
Frequency tolerance	±2.0ppm	Initial tol. @+25°C
Frequency stability	±0.5ppm; ±1.0ppm; 1.5ppm; ±2.0ppm; ±2.5ppm	See note below table
Operating temperature range	-20 to +70°C / -30 to +85°C / -40 to +85°C	In combination to above stabilities.
Aging per year	±1.0ppm	@+25°C
Output waveform	Clipped Sine Wave	--
Output load	10kΩ/10pF	--
Output voltage level	0.8Vp-p	Minimum
Phase noise (example 19.2MHz)	-115dBc/Hz / -135dBc/Hz / -148dBc/Hz	@100Hz / 1kHz / 10kHz
Phase jitter RMS	<1ps	12kHz≤Fj≤20MHz
Supply current	1.5mA / 2.0mA	@10kΩ/10pF (higher value >26MHz)

Note: Frequency stability is the frequency deviation over temperature range in reference to +25°C

PACKAGE OUTLINE / DIMENSIONS

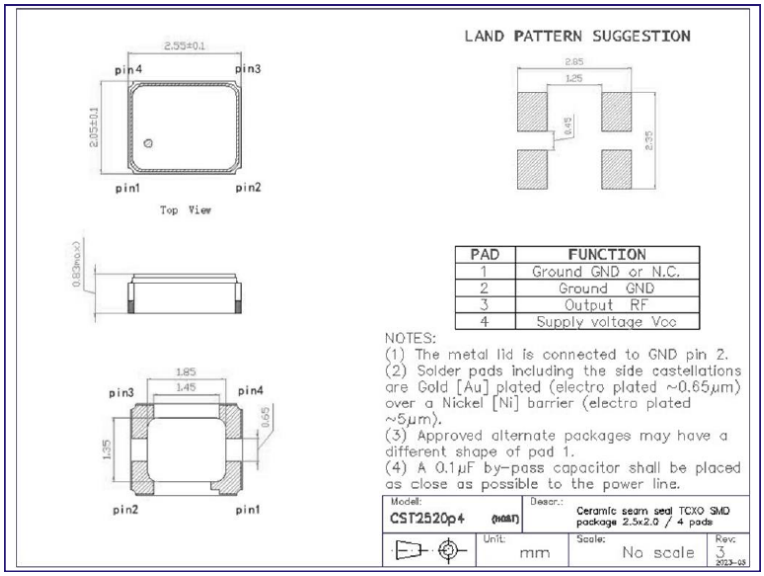

PACKAGING INFORMATION

- Tape & Reel compliant to EIA-481.
- Embossed carrier width 8mm.
- Component pitch in carrier 4mm.
- Reel diameter 180mm.
- QTY per reel: 3,000pcs

RECOMMENDED REFLOW PROFILE

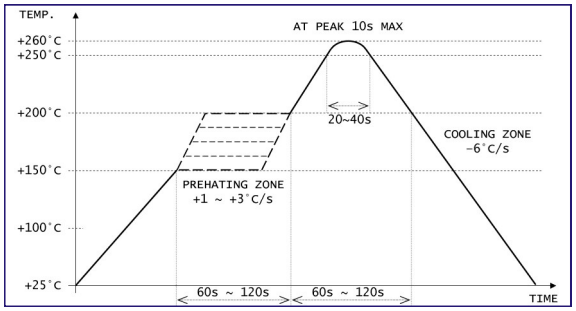

Suzhou HangJing Elec&Tech Co., Ltd. ◆ Http://www.hci.com.hk ◆ No.1,First Qunxing Rd,Suzhou Industrial Park,Jiangsu,China
Telephone:+86 (0)512 6591 6689 ◆ Mobile phone:+86 (0)13819495058 ◆ e-mail: tony@hci.com.hk