Description

The SP1117 is a series of low dropout three-terminal regulators with a dropout of 1.3V at 1A load current. SP1117 features a very low standby current 1.8mA compared to 5mA of competitor.

Other than a fixed version, Vout = 1.2V, 1.8V, 2.5V, 2.85V, 3.3V, and 5V, SP1117 has an adjustable version, which can provide an output voltage from 1.25 to 12V with only two external resistors.

SP1117 offers thermal shut down function, to assure the stability of chip and power system. And it uses trimming technique to guarantee output voltage accuracy within 2%. Other output voltage accuracy can be customized on demand, such as 1%.

SP1117 is available in SOT-89-3L,SOT-223,TO-252 power package.

Features

- Maximum output current is 1.1A(SOT-89-3L)
- Maximum output current is 1.4A(SOT-223,TO-252)
- Range of operation input voltage: Max 30V
- Line regulation: 0.03%/V (typ.)
- Standby current: 1.8mA (SOT-89-3L ,typ.)
- Standby current: 2mA (SOT-223,TO-252,typ.)
- Load regulation: 0.2%/A (typ.)
- Environment Temperature: -20°C~85°C

Applications

- Power Management for Computer Mother Board, Graphic Card
- LCD Monitor and LCD TV
- DVD Decode Board
- ADSL Modem
- Post Regulators For Switching Supplies

Pin Assignment

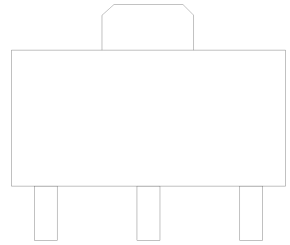

GND/ADJ VOUT VIN

SOT-89-3L

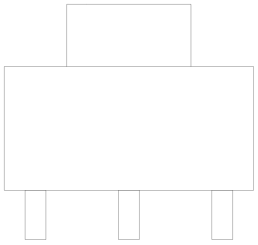

GND/ADJ VOUT VIN

SOT-223

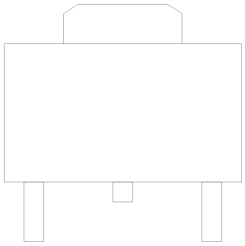

GND/ADJ VOUT VIN

TO-252

Typical Application

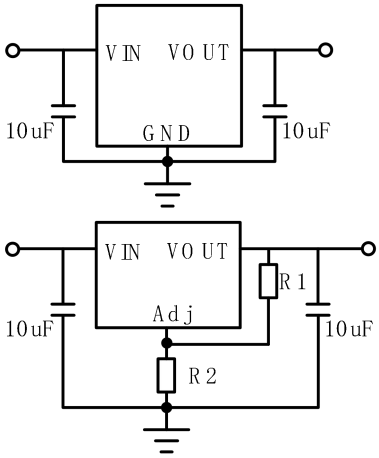

Simplified Block Diagram

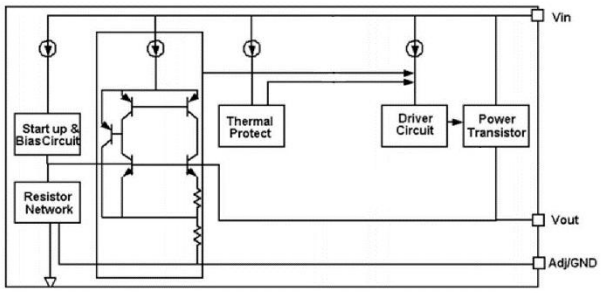

Order Information

SP1117V①②

Designator	Description
①	Output Voltage 18=1.8V 285=2.85V AD=Adj
②	Package: T8: SOT-89-3L TC:SOT-223 TD:TO-252

Marking

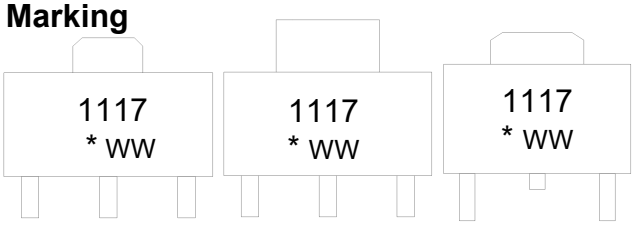

1117 : Product code
* : Output Voltage
WW : Date Code

Absolute Maximum Ratings(Note)

Symbol	Items		Value	Unit
V_{IN}	Input Voltage		~30	V
I_{OUT}	Output Current		1000	mA
P_{DMAX}	Power Dissipation		OTP limited	W
$R_{\theta JA}$	Thermal Resistance	SOT-89-3L	200	℃/W
		SOT-223	20	
		TO-252	10	
T_J	Junction Temperature		-40~150	℃
T_A	Ambient Temperature		-40~85	℃
T_{STG}	Storage Temperature		-40~150	℃
T_{SOLDER}	Package Lead Soldering Temperature (10s)		260	℃

Note: *Exceed these limits to damage to the device. Exposure to absolute maximum rating conditions may affect device reliability.*

Recommanded Operating Range

Symbol	Items	Value	Unit
V_{IN}	Supply Voltage	15	V
T_{OPT}	Operating Temperature	-40 to +85	℃

Electrical Characteristics(T_A=25℃, unless otherwise noted)

Symbol	Parameter	Conditions	Min.	Typ.	Max.	Unit
Vref	Reference voltage	SP1117VAD 10mA≤Iout≤1A , Vin=3.25V	1.225	1.25	1.275	V
Vout	Output voltage	SP1117V12 0≤Iout≤1A , Vin=3.2V	1.176	1.2	1.224	V
		SP1117V18 0≤Iout≤1A , Vin=3.8V	1.764	1.8	1.836	V
		SP1117V25 0≤Iout≤1A , Vin=4.5V	2.45	2.5	2.55	V
		SP1117V285 0≤Iout≤1A , Vin=4.85V	2.793	2.85	2.907	V
		SP1117V33 0≤Iout≤1A , Vin=5.3V	3.234	3.3	3.366	V
		SP1117V50 0≤Iout≤1A , Vin=7.0V	4.9	5	5.1	V
△Vout	Line regulation	SP1117V12 Iout=10mA, 2.7V≤Vin≤10V		0.03	0.2	%/V
		SP1117VAD Iout=10mA, 2.75V≤Vin≤12V		0.03	0.2	%/V
		SP1117V18 Iout=10mA, 3.3V≤Vin≤12V		0.03	0.2	%/V
		SP1117V25 Iout=10mA, 4.0V≤Vin≤12V		0.03	0.2	%/V
		SP1117V285 Iout=10mA, 4.35V≤Vin≤12V		0.03	0.2	%/V
		SP1117V33 Iout=10mA, 4.8V≤Vin≤12V		0.03	0.2	%/V
		SP1117V50 Iout=10mA, 6.5V≤Vin≤12V		0.03	0.2	%/V
△Vout	Load regulation	SP1117V12 Vin =2.7V, 10mA≤Iout≤1A		2	8	mV
		SP1117VAD Vin =2.75V, 10mA≤Iout≤1A		2	8	mV
		SP1117V18 Vin =3.3V, 10mA≤Iout≤1A		3	12	mV
		SP1117V25 Vin =4.0V, 10mA≤Iout≤1A		4	16	mV
		SP1117V285 Vin =4.35V, 10mA≤Iout≤1A		5	20	mV
		SP1117V33 Vin =4.8V, 10mA≤Iout≤1A		6	24	mV
		SP1117V50 Vin =6.5V, 10mA≤Iout≤1A		9	36	mV
Vdrop	Dropout voltage	Iout =100mA		1.15	1.3	V

		Iout=1A		1.3	1.5	V
Imin	Minimum load current	SP1117VAD		1.8	10	mA
Iq	Quiescent Current	SP1117V**,Vin=10V(SOT-89-3L)		1.8	5	mA
		SP1117V**,Vin=10V(SOT-223,TO-252)		2	5	mA
IAdj	Adjust pin current	SP1117VAD Vin=5V,10mA≤Iout≤1A		55	120	uA
Ichange	Iadj change	SP1117VAD Vin=5V,10mA≤Iout≤1A		0.2	10	uA
PSRR	Power Supply Rejection Rate	SP1117VAD, Vin=6.3V，Vo=3.3V,带载100mA	F = 100Hz	72		dB
			F = 1kHz	68		
			F = 10kHz	61		
ΔV/ΔT	Temperature coefficien			±100		ppm

Detailed Description

SP1117 is a series of low dropout voltage, three terminal regulators. Its application circuit is very simple: the fixed version only needs two capacitors and the adjustable version only needs two resistors and two capacitors to work. It is composed of some modules including start-up circuit, bias circuit, bandgap, thermal shutdown, power transistors and its driver circuit and so on.

The thermal shut down modules can assure chip and its application system working safety when the junction temperature is larger than 140°C.

The bandgap module provides stable reference voltage, whose temperature coefficient is compensated by careful design considerations. The temperature coefficient is under 100 ppm/°C. And the accuracy of output voltage is guaranteed by trimming technique.

Typical Performance Characteristics(T_A=25℃，unless otherwise noted.)

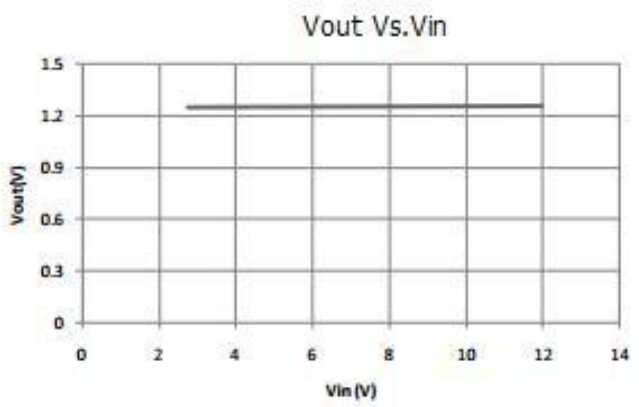

Line regulation

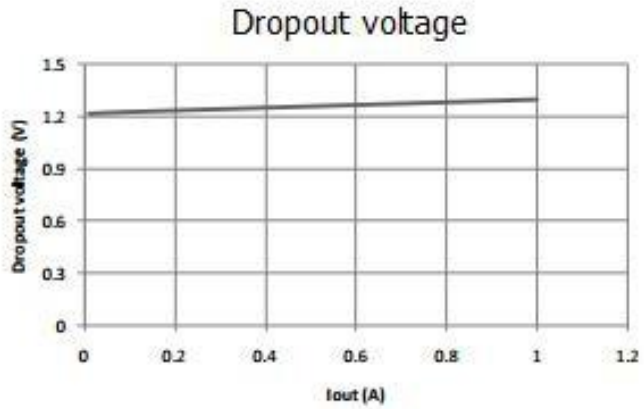

Dropout voltage

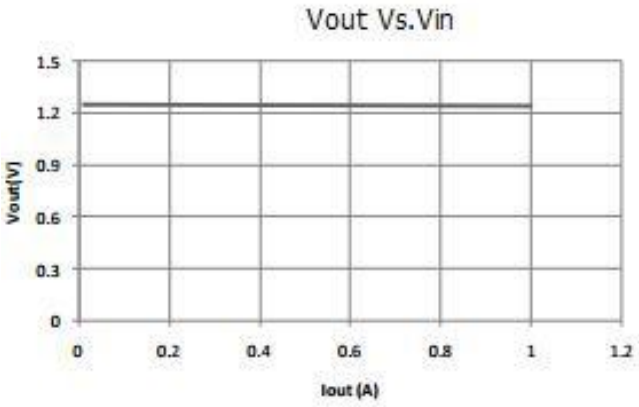

Load regulation

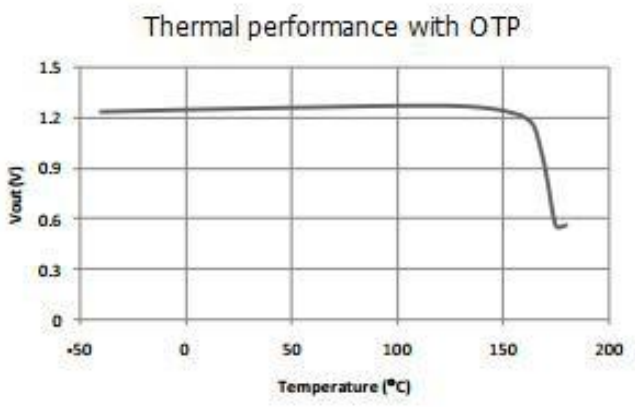

Thermal performance with OTP

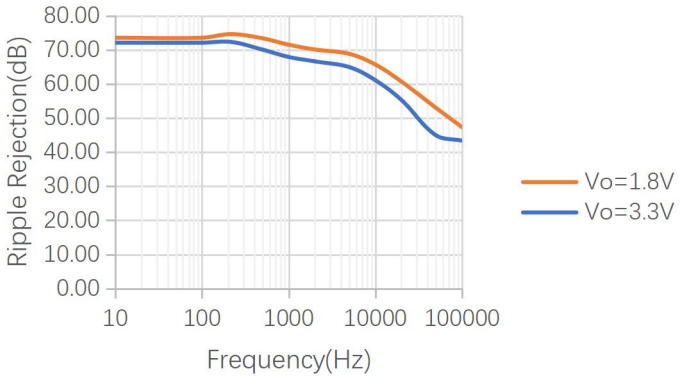

PSSRR

SOT-89-3L Package Outline

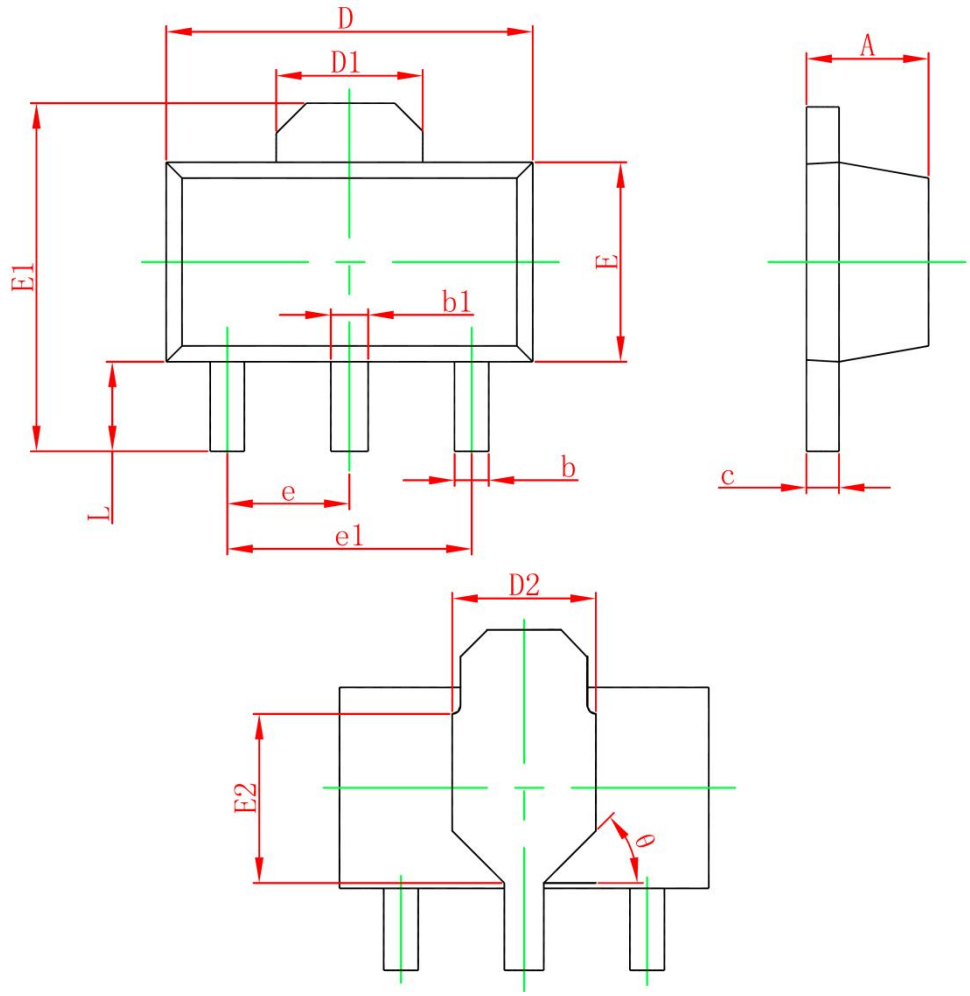

Symbol	Dimensions In Millimeters	
	Min.	Max.
A	1.400	1.600
b	0.320	0.520
b1	0.400	0.580
c	0.350	0.440
D	4.400	4.600
D1	1.550 REF.	
D2	1.750 REF.	
E	2.300	2.600
E1	3.940	4.250
E2	1.900 REF.	
e	1.500 TYP.	
e1	3.000 TYP.	
L	0.900	1.200
θ	45°	

SOT-223 Package Outline

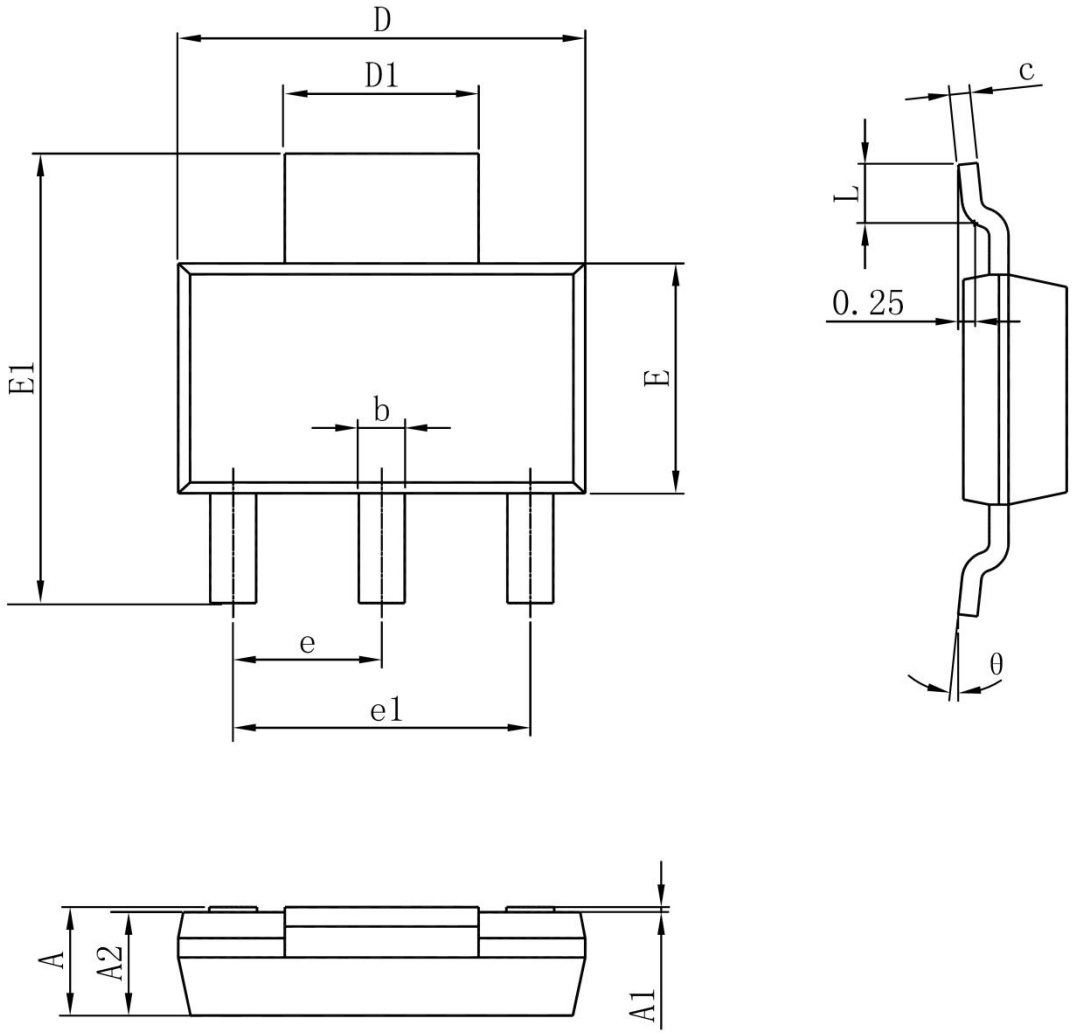

Symbol	Dimensions In Millimeters	
	Min	Max
A	1.520	1.800
A1	0.000	0.100
A2	1.500	1.700
b	0.660	0.820
c	0.250	0.350
D	6.200	6.400
D1	2.900	3.100
E	3.300	3.700
E1	6.830	7.070
e	2.300(BSC)	
e1	4.500	4.700
L	0.900	1.150
θ	0°	0°

TO-252-2L Package Outline

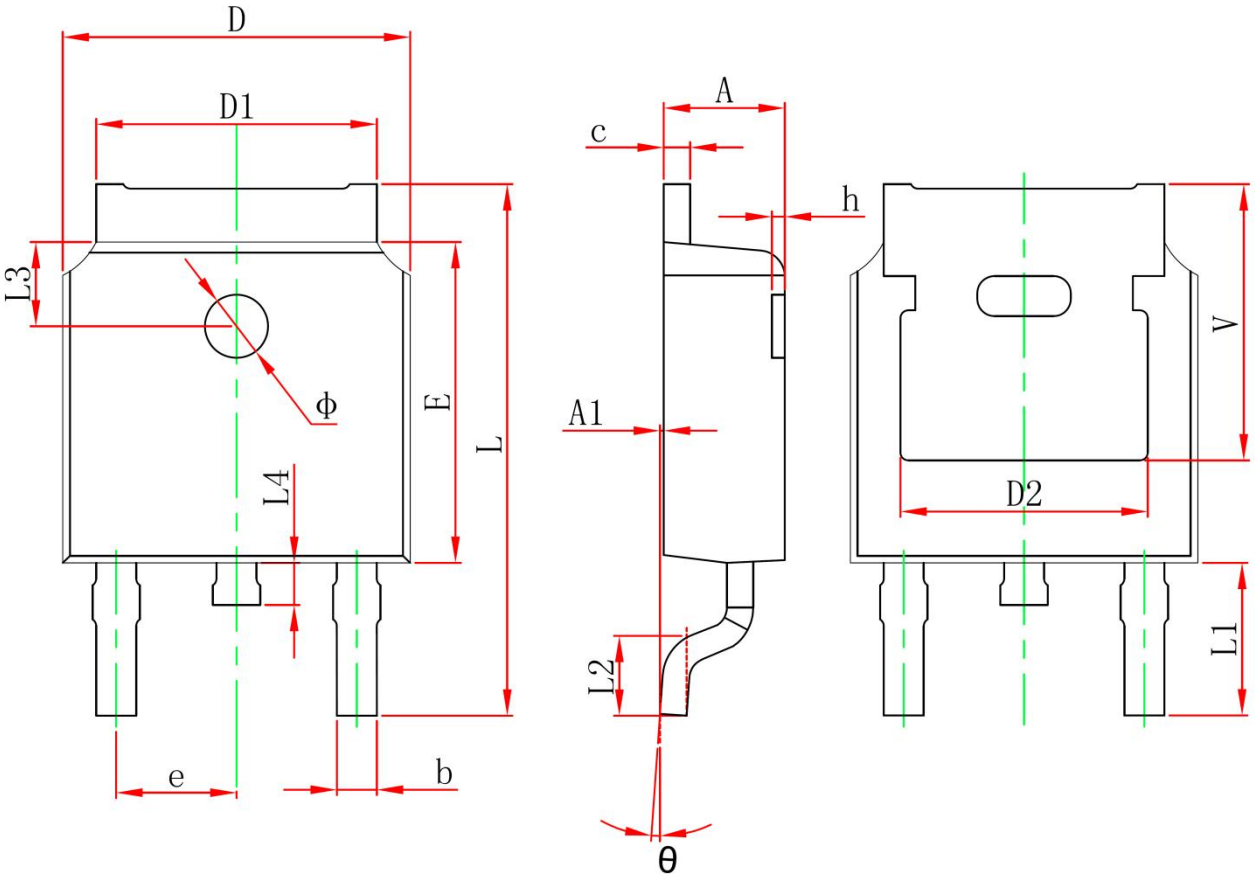

Symbol	Dimensions In Millimeters	
	Min.	Max.
A	2.200	2.400
A1	0.000	0.127
b	0.660	0.860
c	0.460	0.580
D	6.500	6.700
D1	5.100	5.460
D2	4.830 REF.	
E	6.000	6.200
e	2.186	2.386
L	9.800	10.400
L1	2.900 REF.	
L2	1.400	1.700
L3	1.600 REF.	
L4	0.600	1.000
Φ	1.100	1.300
θ	0°	8°
h	0.000	0.300
V	5.350 REF.	