SKQ18P02AD

Feature

- 20V P-Channel MOSFET High Dense Design.
- Ultra low On-Resistance.
- $R_{DS(ON)}$ =9mΩ(typ.) @ V_{GS}= -4.5V
- $R_{DS(ON)}$ =13mΩ(typ.) @ V_{GS}= -2.5V
- Reliable and Rugged.

Applications

- Power Management in Portable Equipment and Battery Powered Systems and other General Application.

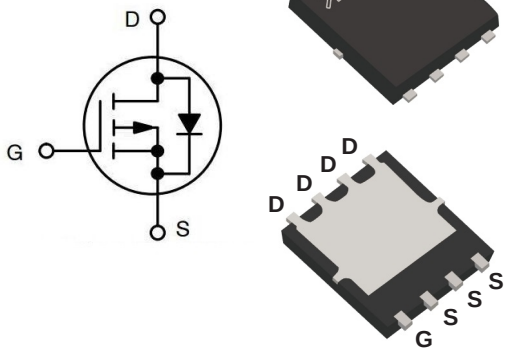

PDFN5060

1. Absolute Maximum Ratings (T_A=25°C Unless Otherwise Noted)

Symbol	Parameter	Rating	Unit
V_{DSS}	Drain-Source Voltage	-20	V
V_{GSS}	Gate-Source Voltage	±12	
I_D	Continue Drain Current	-18	A
I_{DM}	Pulsed Drain Current	-72	
I_S	Diode Continuous Forward Current	-18	A
T_J	Maximum Junction Temperature	150	°C
T_{STG}	Storage Temperature Range	-55 to 150	
$R_{\theta JA}$*	Thermal Resistance-Junction to Ambient(SOP8)	62.5	°C/W

2. Static Electrical Characteristics (T_A=25°C Unless Otherwise Noted)

Symbol	Parameter	Test Condition	Min.	Typ.	Max.	Unit
Static						
BV_{DSS}	Drain-Source Breakdown Voltage	V_{GS}=0V, I_{DS}=-250μA	-20			V
I_{DSS}	Zero Gate Voltage Drain Current	V_{DS}=-16V, V_{GS}=0V			-1	μA
		T_J=85°C			-30	
$V_{GS(th)}$	Gate Threshold Voltage	V_{DS}=V_{GS}, I_D=250μA	-0.5	-0.7	-1	V
I_{GSS}	Gate Body Leakage Current	V_{GS}=±12V, V_{DS}=0V			±100	nA
$R_{DS(ON)}$	Drain-Source On-state Resistance	V_{GS}=-4.5V, I_{DS}=-1A		9	12	mΩ
		V_{GS}=-2.5V, I_{DS}=-1A		13	16	
V_{SD}	Diode Forward Voltage	I_{SD}=-1A, V_{GS}=0V		-0.7	-1.3	V

*Note:
a : Current maybe limit by bonding wire.
b : The $R_{\Theta JA}$ is the sum of the thermal impedance from junction to ambient and depend on package type.

PDFN5060

Unit:mm

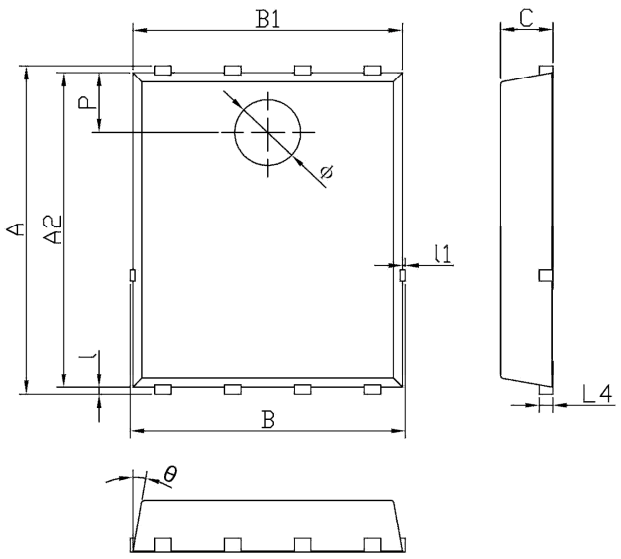

Dimensions In Millimeterer			
Symbol	MIN	TYP	MAX
A	5.90	6.00	6.10
a	3.91	4.01	4.11
A2	5.70	5.75	5.80
B	4.90	5.00	5.10
b	3.37	3.47	3.57
B1	4.80	4.90	5.00
C	0.90	0.95	1.00
L	0.35	0.40	0.45
l	0.06	0.13	0.20
L1	1.10	–	–
l1	–	–	0.10
L2	1.17	1.27	1.37
L4	0.21	0.26	0.34
L6	0.51	0.61	0.71
L7	0.51	0.61	0.71
P	1.00	1.10	1.20
θ	8°	10°	12°
ϕ	1.10	1.20	1.30