XKB Connecitity

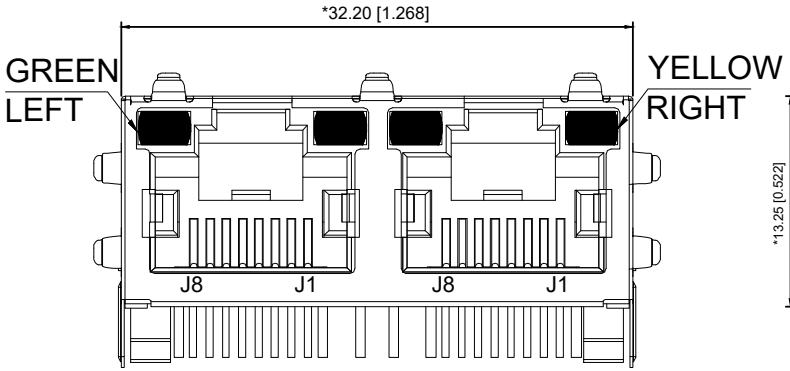

FRONT VIEW

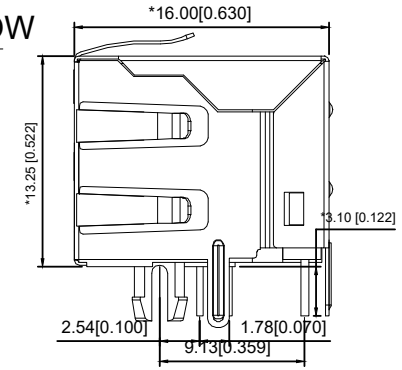

RIGHT SIDE VIEW

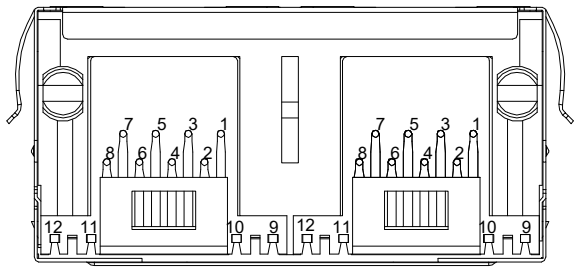

BOTTOM VIEW

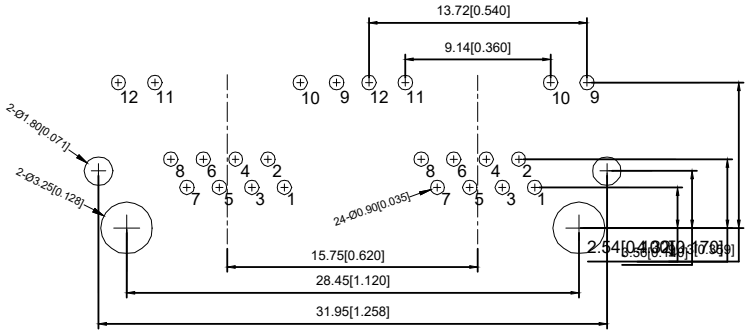

RECOMMENDED PCB LAYOUT
VIEWED FROM COMPONENT SIDE

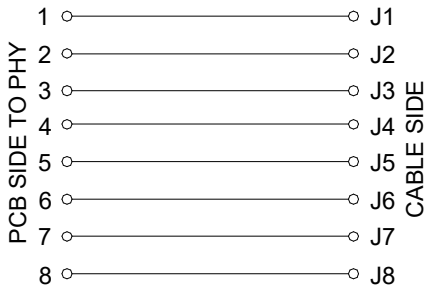

XKB Connecitity

MATERIAL 材料:
HOUSING 外壳: PBT,UL94V-0,BLACK.
TERMINAL 端子: PHOSPHOR BRONZE Ø=0.46MM,GOLD PLATING
SHIELD 保护物: C2680,T=0.20MM,20 MIN NICKEL PLATING ON ALL AREA.
MECHANICAL 机械:
DURABILITY 耐用性: 750 CYCLES MIN,12.5MM/MINUTE.
INSERTION FORCE 插入力:2.2KG.F MAX
RETENTION STRENGTH 保持力:7.7KG.F BETWEEN JACK AND PLUG.
OPERATING TEMPERATURE 工作温度: -40°C~+85°C.
STORAGE TEMPERATURE 储存温度: -40°C~+85°C.
ALL CRITICAL DIMENSIONS WITH "*"
ELECTRICAL电气:
VOLTAGE 电压: 125 VOLTS AC.
CURRENT RATING 电流额定值: 1.5AMP.
DIELECTRIC STRENGTH 介电强度: 1000 VAC RMS 50HZ OR 60HZ,1 MIN
INSULATION RESISTANCE 绝缘电阻: 500 MEGA OHMS MIN.INITIAL
AFTER 500V DC FOR 1 MINUTE.
CONTACT RESISTANCE 接触电阻:SINGLE TERMINAL 30 MILLIOHMS MAX.
INITIAL 50 MILLIOHMS MAX. AFTER
DURABILITY TEST.

LED Specification

Standard LED Color	LED Wavelength	Foward(A)	Foward(V)
Green	569nm	20mA	1.6-2.6V
Yellow	589nm	20mA	1.6-2.6V

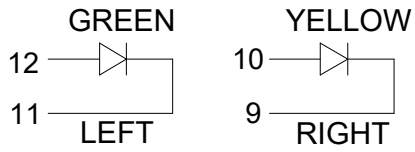

MARK	DESCRIPTION	DATE	REVISED	APPROVED
ΔX				
ΔX				
ΔX				

REVISIONS

ANGLAR	±5°
L≤ 4	±0.2
4<L≤ 16	±0.3
16<L≤ 63	±0.4
L> 63	±0.5

UNSPECIFIED TOLERANCES

www.helloxkb.com www.helloxkb.cn www.xk-dg.cn

XKB INDUSTRIAL PRECISION CO.,LIMITED

DSND		SCALE: N/A	MODEL TYPE: RJ JACK
DWN		VIEW:	PART NO.: X12BDDB2A1DY1027
CHKD		UNIT: mm/in	DWG NO.: X-X12BDDB2A1DY1027
APPD		SIZE: A4	

WEIGHT	SHEET	REVISION
	1/1	A0