DFN2020-6L Plastic-Encapsulate MOSFETS

Features

- V_{DS}=-12V
- I_D=-12A
- $R_{DS(on)}$@V_{GS}=-4.5V < 18mΩ
- $R_{DS(on)}$@V_{GS}=-2.5V < 22mΩ
- High power and current handing capability
- Voltage controlled small signal switch
- Fast Switching Speedze

Drain-source Voltage
-12 V
Drain Current
-12 Ampere

Applications

- Power Management Functions
- DC-DC Converters

DFN2020-6L



Mechanical Data

- Case: DFN2020-6L
  Molding compound meets UL 94V-0 flammability rating, RoHS-compliant,halogen-free
- Terminals: Solder plated, solderable per MIL-STD-750,Method 2026

Function Diagram

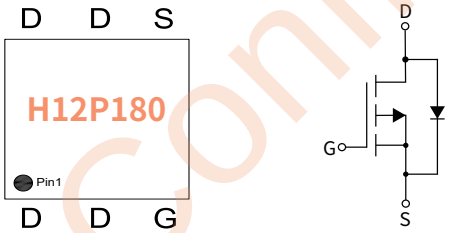

Ordering Information

PACKAGE	PACKAGE CODE	UNIT WEIGHT(g)	REEL(pcs)	BOX(pcs)	CARTON(pcs)	DELIVERY MODE
DFN2020-6L	R3	0.01	3000	45000	180000	7''

Maximum Ratings (Ta=25°C Unless otherwise specified)

PARAMETER	SYMBOL	UNIT	VALUE
Drain-source Voltage	V_{DS}	V	-12
Gate-source Voltage	V_{GS}	V	±12
Drain Current	I_D	A	-12
Pulsed Drain Current (1)	I_{DM}	A	-48
Total Power Dissipation	P_D	W	3
Junction temperature	T_J	°C	-55 ~+150
Storage temperature	T_{stg}	°C	-55 ~+150
Thermal Resistance Junction-to-Ambient @ Steady State	$R_{\theta JA}$	°C / W	41.7

HJC Confidential

Static Parameter Characteristics (Tj=25°C Unless otherwise specified)

PARAMETER	SYMBOL	Condition	UNIT	Min	Typ	Max
Drain-Source Breakdown Voltage	BV_{DSS}	V_{GS}= 0V, I_D=-250μA	V	-12	—	—
Zero Gate Voltage Drain Current	I_{DSS}	V_{DS}=-12V, V_{GS}=0V	μA	—	—	-1.0
Gate-Body Leakage Current	I_{GSS}	V_{GS}= ±12V, V_{DS}=0V	nA	—	—	±100
Gate Threshold Voltage	$V_{GS(th)}$	V_{DS}= V_{GS}, I_D=-250μA	V	-0.4	-0.7	-1.0
Static Drain-Source On-Resistance (2)	$R_{DS(ON)}$	V_{GS}= -4.5V, I_D=-10A	mΩ	—	11.4	18
		V_{GS}= -2.5V, I_D=-6.5A		—	16	22

Dynamic Parameters

PARAMETER	SYMBOL	Condition	UNIT	Min	Typ	Max
Input Capacitance	C_{iss}	V_{DS}=-6V, V_{GS}=0V, f=1MHZ	pF	—	1865	—
Output Capacitance	C_{oss}			—	248	—
Reverse Transfer Capacitance	C_{rss}			—	217	—

Switching Parameters

PARAMETER	SYMBOL	Condition	UNIT	Min	Typ	Max
Turn-on Delay Time	$t_{D(on)}$	V_{GS}=-4.5V, V_{DD}=-6V, I_D=-12A ,R_{GEN}=2.4Ω	nS	—	15	—
Turn-on Rise Time	t_r		nS	—	78	—
Turn-off Delay Time	$t_{D(off)}$		nS	—	75	—
Turn-off fall Time	t_f		nS	—	77	—
Total Gate Charge	Q_g	V_{DS}=-6V, I_D=-6A V_{GS}=-4.5V	nC	—	16	—
Gate-Source Charge	Q_{gs}		nC	—	3	—
Gate-Drain Charge	Q_{gd}		nC	—	4	—

Drian-Source Diode Characteristics

PARAMETER	SYMBOL	Condition	UNIT	Min	Typ	Max
Diode Forward Voltage	V_{SD}	I_S=-12A, V_{GS}=0V	V	—	—	-1.2
Maximum Body-Diode Continuous Current	I_S	—	A	—	—	-12

Note :
(1)Repetitive Rating: Pulse width limited by maximum junction temperature.
(2)Pulse test: Pulse width ⩽ 300us, duty cycle ⩽ 2%.

HJC Confidential

Ratings And Characteristics Curves (Ta=25°C Unless otherwise specified)

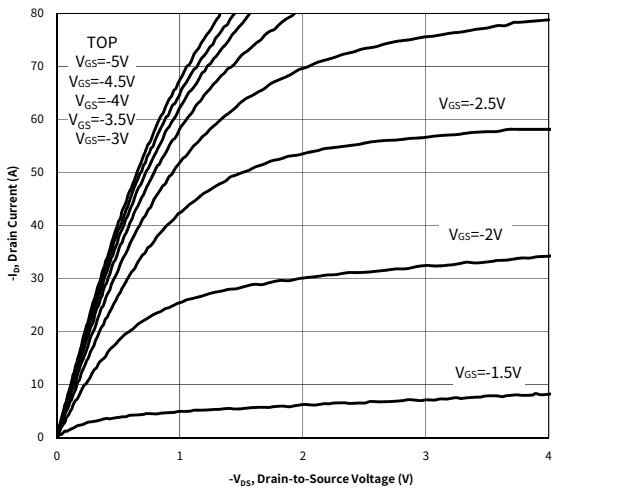

Fig.1 Output Characteristics

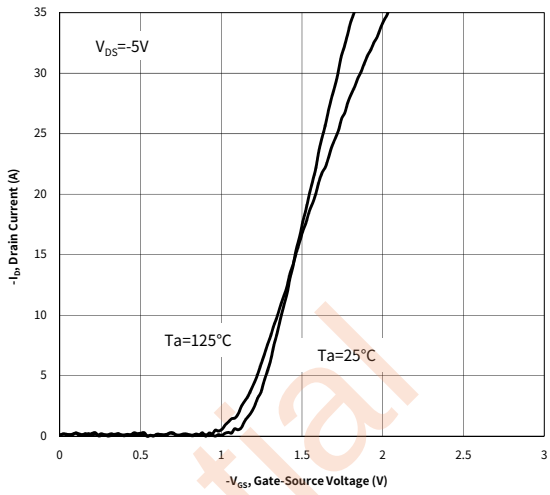

Fig.2 Transfer Characteristics

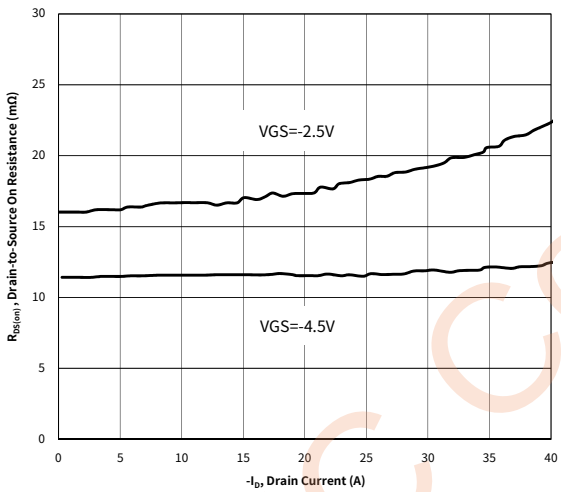

Fig.3 On-Resistance vs. Drain Current and Gate Voltage

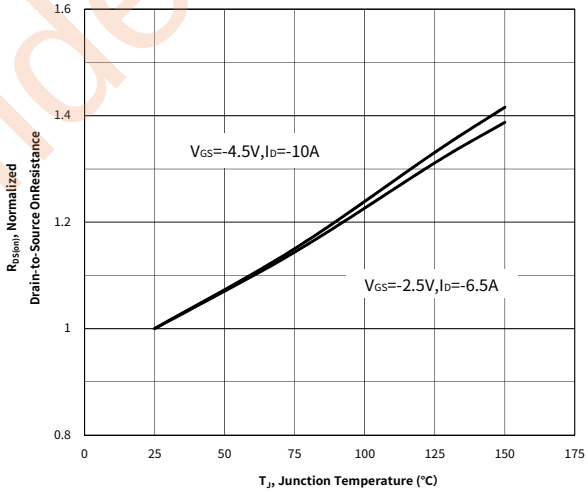

Fig.4 On-Resistance vs. Junction Temperature

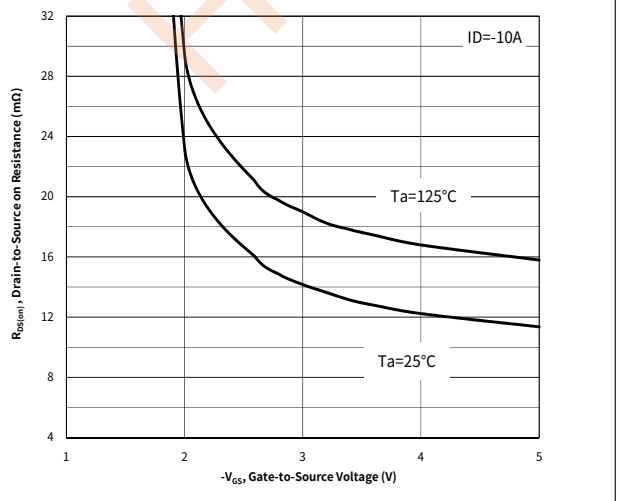

Fig.5 On-Resistance vs. Gate to Source Voltage

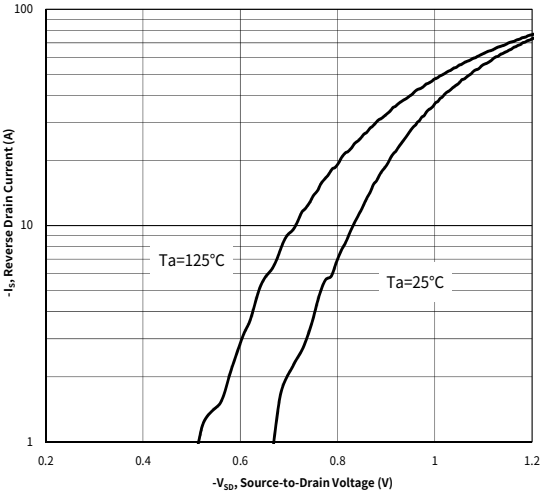

Fig.6 Typical Body-Diode Forward Characteristics

HJC Confidential

Ratings And Characteristics Curves (Ta=25°C Unless otherwise specified)

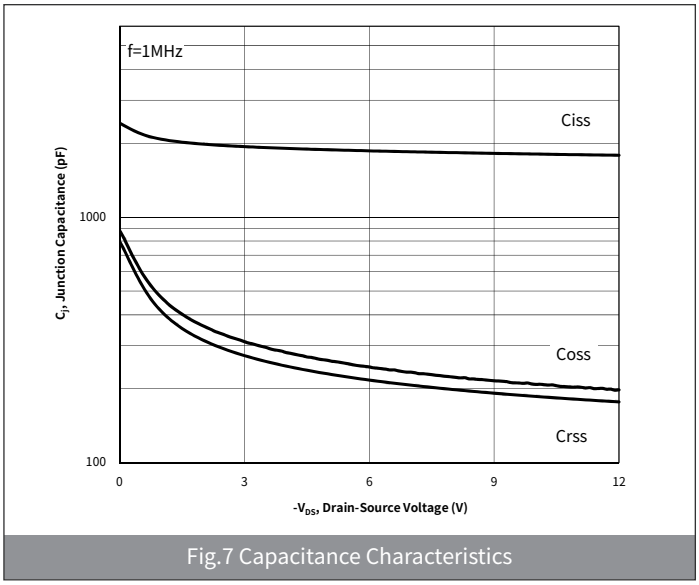

Fig.7 Capacitance Characteristics

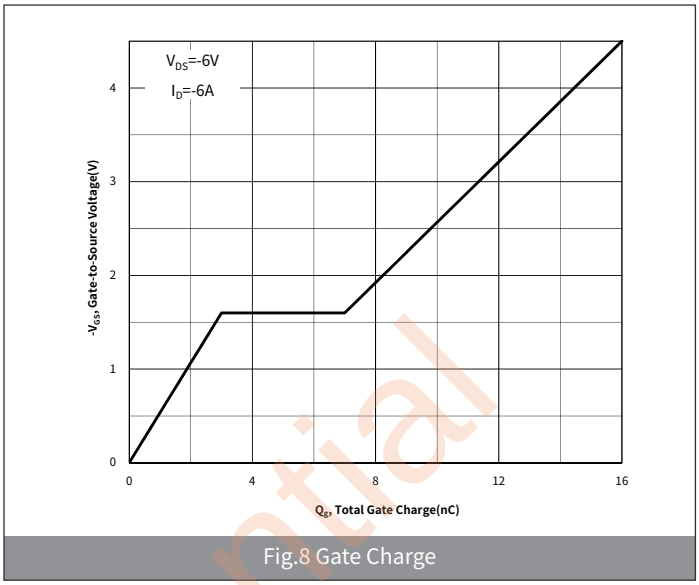

Fig.8 Gate Charge

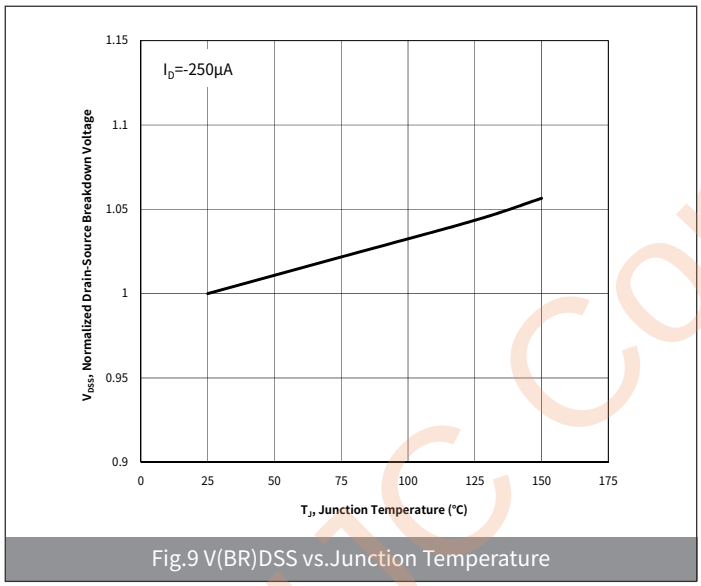

Fig.9 V(BR)DSS vs.Junction Temperature

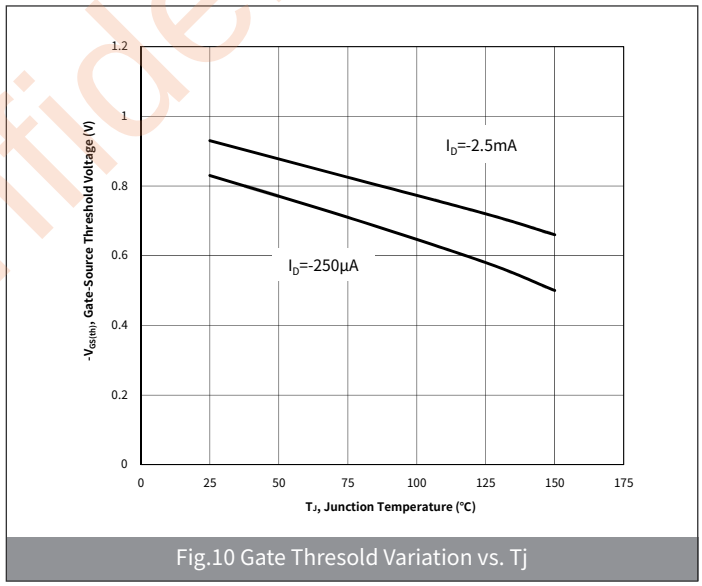

Fig.10 Gate Thresold Variation vs. Tj

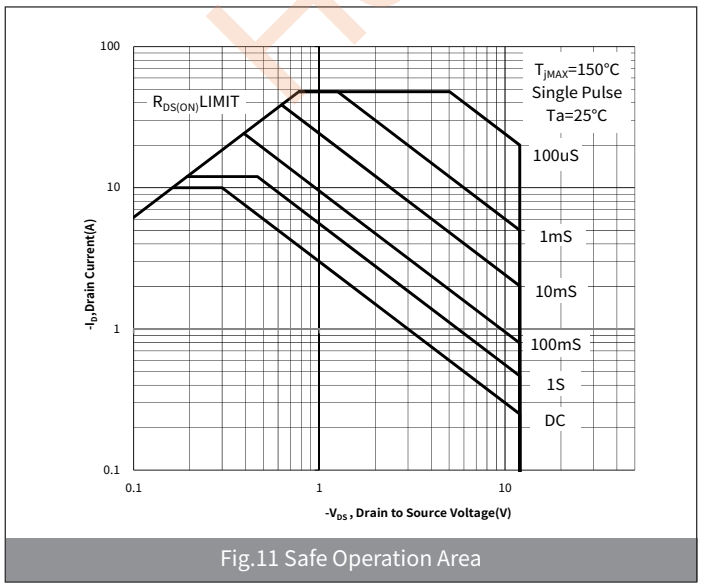

Fig.11 Safe Operation Area

HJC confidential

Ratings And Characteristics Curves (Ta=25°C Unless otherwise specified)

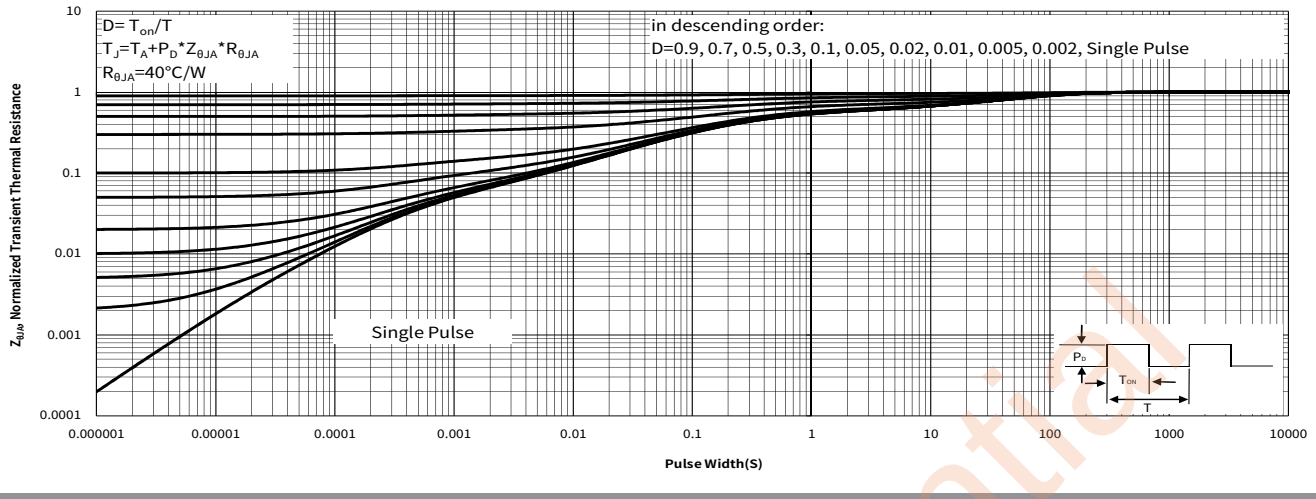

Fig.12 Normalized Maximum Transient Thermal Impedance

Package Outline Dimensions (DFN2020-6L)

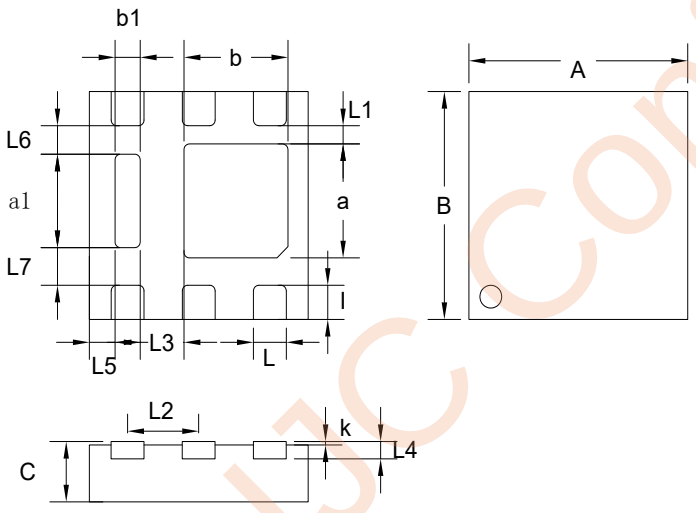

Symbol	Dimensions			
	Millimeters		Inches	
	Min.	Max.	Min.	Max.
A	1.95	2.05	0.077	0.081
B	1.95	2.05	0.077	0.081
C	0.45	0.55	0.018	0.022
L	0.25	0.35	0.010	0.014
L1	0.10	0.30	0.004	0.012
L2	0.65 TYP		0.026 TYP	
L3	0.30	0.50	0.012	0.020
L4	0.15 TYP		0.006 TYP	
L5	0.12	0.32	0.005	0.013
L6	0.15	0.35	0.006	0.014
L7	0.23	0.43	0.009	0.017
a	0.90	1.10	0.035	0.043
a1	0.72	0.92	0.028	0.036
b	0.85	1.05	0.033	0.041
b1	0.13	0.33	0.005	0.013
l	0.25	0.35	0.010	0.014
K	0.05	-	0.002	-

Suggested Pad Layout

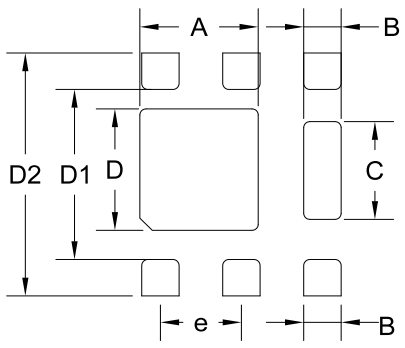

Symbol	Dimensions			
	Millimeters		Inches	
	Min.	Max.	Min.	Max.
A	0.90	1.10	0.035	0.043
B	0.30	0.50	0.012	0.020
C	0.56	0.76	0.022	0.030
D	0.95	1.15	0.037	0.045
D1	1.30	1.50	0.051	0.059
D2	2.20	2.40	0.087	0.094
e	0.55	0.75	0.022	0.030

HJC Confidential

1.Gate Charge Test Circuit & Waveforms

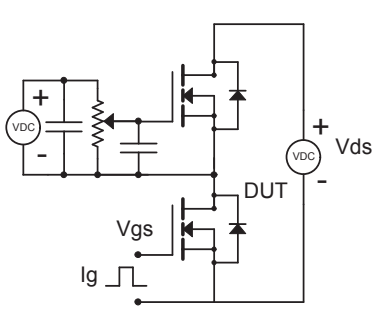

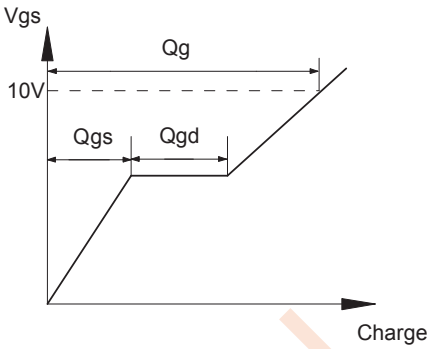

2. Resistive Switching Test Circuit & Waveforms

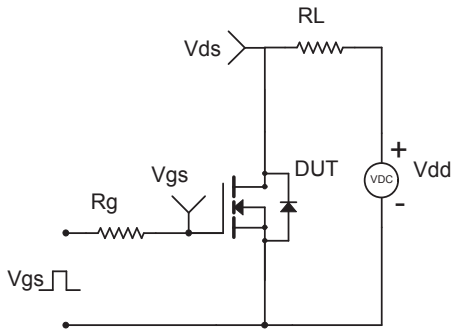

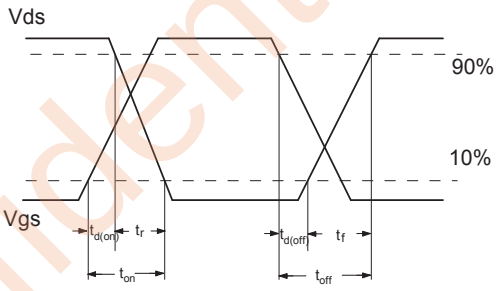

3.Unclamped Inductive Switching (UIS) Test Circuit & Waveforms

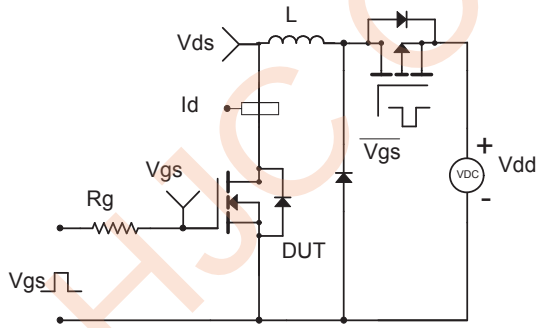

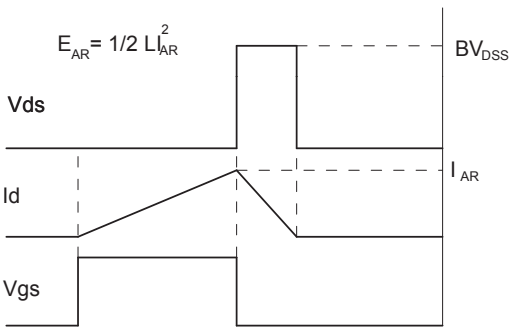

4.Diode Recovery Test Circuit & Waveforms

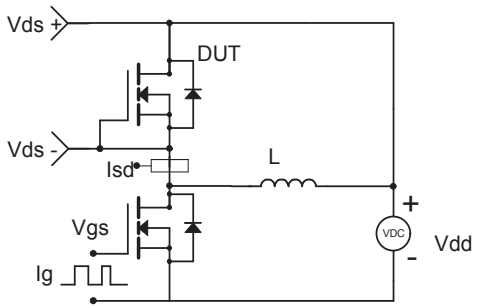

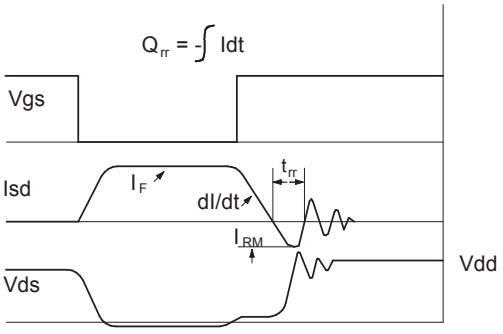

HJC Confidential