BORN SEMICONDUCTOR

P4SMA Series

Transient Voltage Suppressor

Features

- Excellent clamping capability
- Low leakage current
- High surge capability
- Glass passivated chip
- Epoxy resin package
- Built-in strain relief
- Will not fatigue
- RoHS Compliant
- IEC 61000-4-2 ±30kV contact ; ±30kV air
- Fast response time:
  typically less than 1.0ps from 0 Volts to V_{BR} min

Package

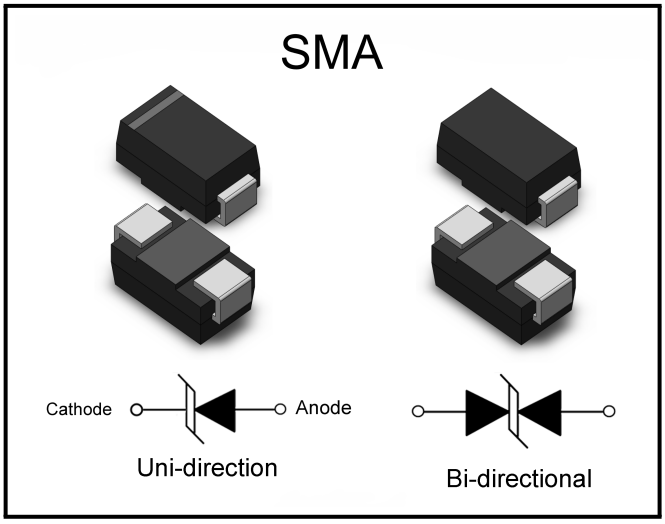

Mechanical Characteristics

- Package: SMA plastic package
- Lead Finish: Matte Tin
- Case Material: Epoxy Molding Compound
- UL Flammability Classification Rating 94V-0
- Moisture Sensitivity: Level 1 per J-STD-020

Applications

- Telecom
- Computer
- Industrial electronic
- Consumer electronic

Making Code

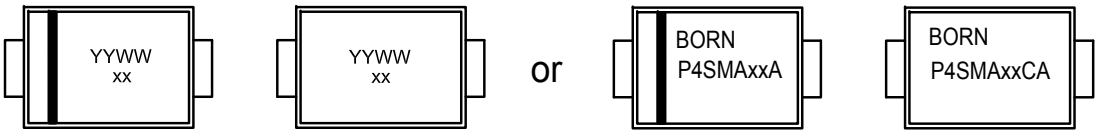

YYWW = Date Code
xx = Type Code

Unidirection

Bidirection

Summary of Packing Options

Package	Packing Description	Packing Quantity	Industry Standard
SMA	Tape/Reel,11” reel	5000	EIA-481-1

BORN SEMICONDUCTOR , INC. ALL RIGHT RESERVED

P4SMA Series

Transient Voltage Suppressor

Electrical Parameters

Parameter	Definition
C_J	Junction Capacitance - typical capacitance measured with 0V or V_R bias
I_{PP}	Peak Pulse Current - maximum rated peak impulse current
V_C	Clamping Voltage - Peak voltage measured across the suppressor at a specified Ippm
V_{BR}	Breakdown Voltage - Maximum voltage that flows though the TVS at a specified test current (I_T)
I_R	Leakage Current - maximum peak off-state current measured at V_R
V_R	Peak Off-state Voltage - maximum voltage that can be applied while maintaining off state

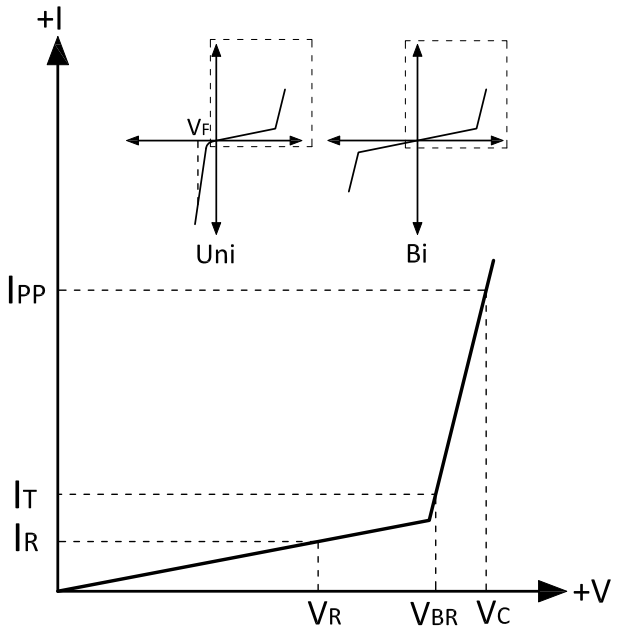

Absolute Maximum Ratings (T_A=+25°C, unless otherwise noted)

Parameter	Symbol	Value	Units
Peak Pulse Power Dissipation (Note1,2)	P_{PPM}	400	W
Steady State Power Dissipation (Note3)	P_D	3.3	W
Peak Forward Surge Current (Note4)	I_{FSM}	40	A
Maximum Instantaneous Forward Voltage at 20A (Note5)	V_{FM}	3.5/6.5	V
Typical Thermal Resistance Junction to Lead	$R_{\theta JL}$	30	°C/W
Typical Thermal Resistance Junction to Ambient	$R_{\theta JA}$	120	°C/W
Operating Temperature Range	T_J	-55 to 150	°C
Storage Temperature Range	T_{STG}	-55 to 150	°C

Notes:

(1) Non-repetitive current pulse , 10/1000us Waveform.

(2) Mounted on copper pad area of 5×5mm to each terminal.

(3) Infinite HeatSink at T_L =50°C

(4) Measured on 8.3ms single half sine wave or equivalent square wave, duty cycle=4 perminute maximum.

(5) For Unidirectional Only, V_{FM}<3.5V for V_{BR} ≤200V and V_{FM}<6.5V for V_{BR}≥201V.

BORN SEMICONDUCTOR , INC. ALL RIGHT RESERVED

Specifications are subject to change without notice.
Please refer to http://*www.born-tw.com* for current information.

P4SMA Series

Transient Voltage Suppressor

Absolute Maximum Ratings (T_A=+25°C, unless otherwise noted)

Part Number	Part Number	Marking Code		Reverse Stand-Off Votage	Breakdown Voltage V_{BR}@I_T		Test Current I_T	Maximum Clamping Voltage V_C @ I_{pp}	Maximum Peak Pulse Current I_{pp}	Maximun Reverse Leakage I_R @V_R
(Uni)	(Bi)	(Uni)	(Bi)	(V)	Min.(V)	Max.(V)	(mA)	(V)	(A)	(uA)
P4SMA6.8A	P4SMA6.8CA	6.8A	6.8CA	5.8	6.45	7.14	10	10.5	39.0	1000
P4SMA7.5A	P4SMA7.5CA	7.5A	7.5CA	6.4	7.13	7.88	10	11.3	36.3	500
P4SMA8.2A	P4SMA8.2CA	8.2A	8.2CA	7.02	7.79	8.61	10	12.1	33.9	200
P4SMA9.1A	P4SMA9.1CA	9.1A	9.1CA	7.78	8.65	9.5	1	13.4	30.6	50
P4SMA10A	P4SMA10CA	10A	10CA	8.55	9.5	10.5	1	14.5	28.3	10
P4SMA11A	P4SMA11CA	11A	11CA	9.4	10.5	11.6	1	15.6	26.3	5
P4SMA12A	P4SMA12CA	12A	12CA	10.2	11.4	12.6	1	16.7	24.6	5
P4SMA13A	P4SMA13CA	13A	13CA	11.1	12.4	13.7	1	18.2	22.5	1
P4SMA15A	P4SMA15CA	15A	15CA	12.8	14.3	15.8	1	21.2	19.30	1
P4SMA16A	P4SMA16CA	16A	16CA	13.6	15.2	16.8	1	22.5	18.20	1
P4SMA18A	P4SMA18CA	18A	18CA	15.3	17.1	18.9	1	25.2	16.10	1
P4SMA20A	P4SMA20CA	20A	20CA	17.1	19	21	1	27.7	14.80	1
P4SMA22A	P4SMA22CA	22A	22CA	18.8	20.9	23.1	1	30.6	13.40	1
P4SMA24A	P4SMA24CA	24A	24CA	20.5	22.8	25.2	1	33.2	12.30	1
P4SMA27A	P4SMA27CA	27A	27CA	23.1	25.7	28.4	1	37.5	10.90	1
P4SMA30A	P4SMA30CA	30A	30CA	25.6	28.5	31.5	1	41.4	9.90	1
P4SMA33A	P4SMA33CA	33A	33CA	28.2	31.4	34.7	1	45.7	9.00	1
P4SMA36A	P4SMA36CA	36A	36CA	30.8	34.2	37.8	1	49.9	8.20	1
P4SMA39A	P4SMA39CA	39A	39CA	33.3	37.1	41	1	53.9	7.60	1
P4SMA43A	P4SMA43CA	43A	43CA	36.8	40.9	45.2	1	59.3	6.90	1
P4SMA47A	P4SMA47CA	47A	47CA	40.2	44.7	49.4	1	64.8	6.30	1
P4SMA51A	P4SMA51CA	51A	51CA	43.6	48.5	53.6	1	70.1	5.80	1
P4SMA56A	P4SMA56CA	56A	56CA	47.8	53.2	58.8	1	77	5.30	1
P4SMA62A	P4SMA62CA	62A	62CA	53	58.9	65.1	1	85	4.80	1
P4SMA68A	P4SMA68CA	68A	68CA	58.1	64.6	71.4	1	92	4.50	1
P4SMA75A	P4SMA75CA	75A	75CA	64.1	71.3	78.8	1	103	4.00	1
P4SMA82A	P4SMA82CA	82A	82CA	70.1	77.9	86.1	1	113	3.60	1
P4SMA91A	P4SMA91CA	91A	91CA	77.8	86.5	95.5	1	125	3.30	1
P4SMA100A	P4SMA100CA	100A	100CA	85.5	95	105	1	137	3.00	1
P4SMA110A	P4SMA110CA	110A	110CA	94	105	116	1	152	2.70	1
P4SMA120A	P4SMA120CA	120A	120CA	102	114	126	1	165	2.50	1
P4SMA130A	P4SMA130CA	130A	130CA	111	124	137	1	179	2.30	1
P4SMA150A	P4SMA150CA	150A	150CA	128	143	158	1	207	2.00	1

BORN SEMICONDUCTOR , INC. ALL RIGHT RESERVED

Specifications are subject to change without notice.
Please refer to http://*www.born-tw.com* for current information.

Revision: 2022-Jan-1-B

P4SMA Series

Transient Voltage Suppressor

Absolute Maximum Ratings (T_A=+25°C, unless otherwise noted)

Part Number	Part Number	Marking Code		Reverse Stand-Off Votage	Breakdown Voltage V_{BR}@I_T		Test Current I_T	Maximum Clamping Voltage V_C @ I_{pp}	Maximum Peak Pulse Current I_{pp}	Maximun Reverse Leakage I_R @V_R
(Uni)	(Bi)	(Uni)	(Bi)	(V)	Min.(V)	Max.(V)	(mA)	(V)	(A)	(uA)
P4SMA160A	P4SMA160CA	160A	160CA	136	152	168	1	219	1.90	1
P4SMA170A	P4SMA170CA	170A	170CA	145	162	179	1	234	1.80	1
P4SMA180A	P4SMA180CA	180A	180CA	154	171	189	1	246	1.70	1
P4SMA200A	P4SMA200CA	200A	200CA	171	190	210	1	274	1.50	1
P4SMA220A	P4SMA220CA	220A	220CA	185	209	231	1	328	1.30	1
P4SMA250A	P4SMA250CA	250A	250CA	214	237	263	1	344	1.20	1
P4SMA300A	P4SMA300CA	300A	300CA	256	285	315	1	414	1.00	1
P4SMA350A	P4SMA350CA	350A	350CA	300	332	368	1	482	0.85	1
P4SMA400A	P4SMA400CA	400A	400CA	342	380	420	1	548	0.75	1
P4SMA440A	P4SMA440CA	440A	440CA	376	418	462	1	602	0.68	1
P4SMA480A	P4SMA480CA	480A	480CA	408	456	504	1	658	0.61	1
P4SMA510A	P4SMA510CA	510A	510CA	434	485	535	1	698	0.57	1
P4SMA530A	P4SMA530CA	530A	530CA	477	503.5	556.5	1	725	0.55	1
P4SMA540A	P4SMA540CA	540A	540CA	486	513	567	1	740	0.54	1

BORN SEMICONDUCTOR , INC. ALL RIGHT RESERVED

Specifications are subject to change without notice.
Please refer to http://*www.born-tw.com* for current information.

P4SMA Series

Transient Voltage Suppressor

Ratings and Characteristic Curves (T_A=+25°C, unless otherwise noted)

Figure 1: Peak Pulse Power Rating

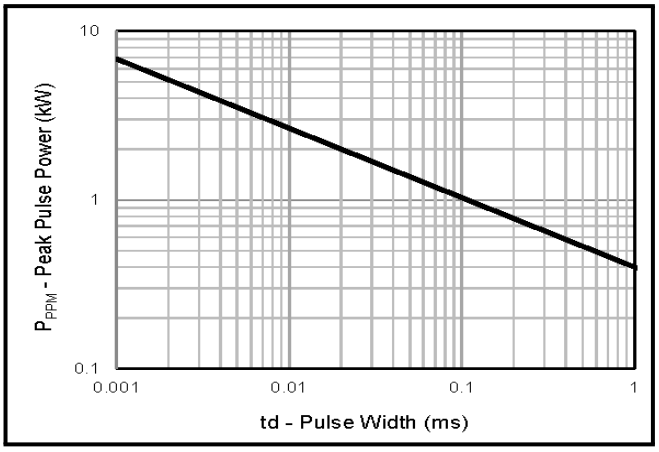

Figure 2: Pulse Derating Curve

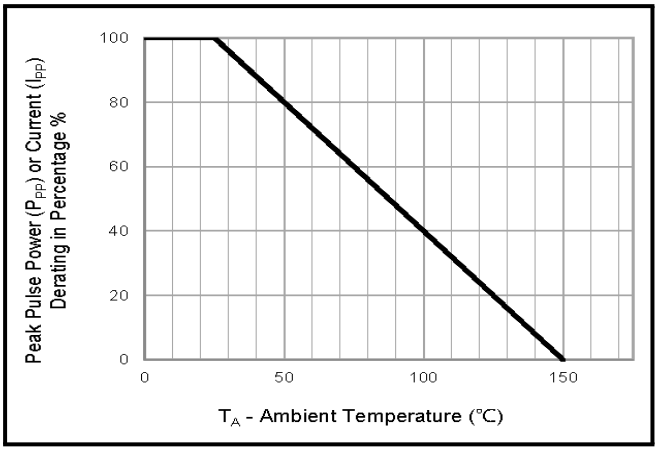

Figure 3: Pulse Waveform

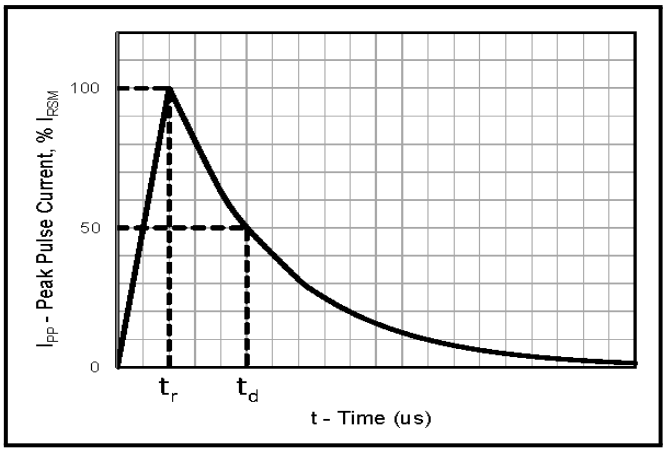

Figure 4 : Typical Junction Capacitance

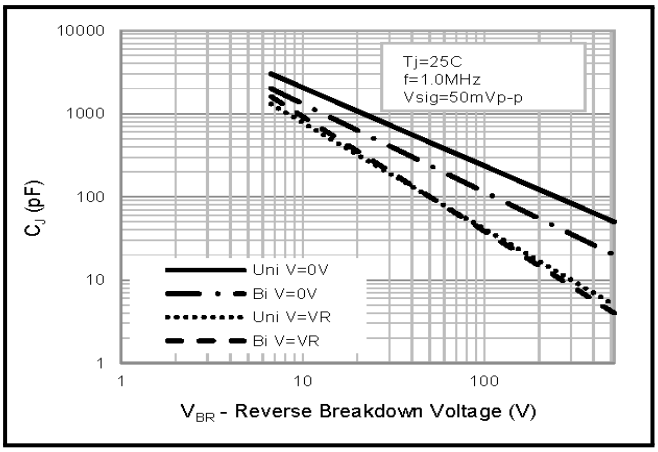

Figure 5: Steady State Power Dissipation Derating Curve

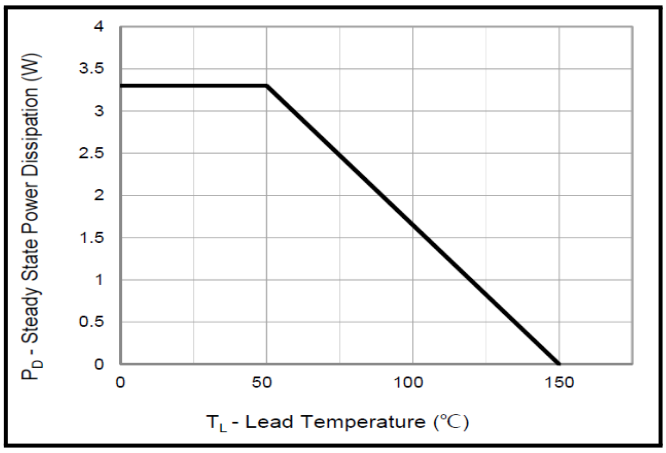

Figure 6 : Maximum Non-Repetitive Peak Forward Surge Current Uni-Directional Only

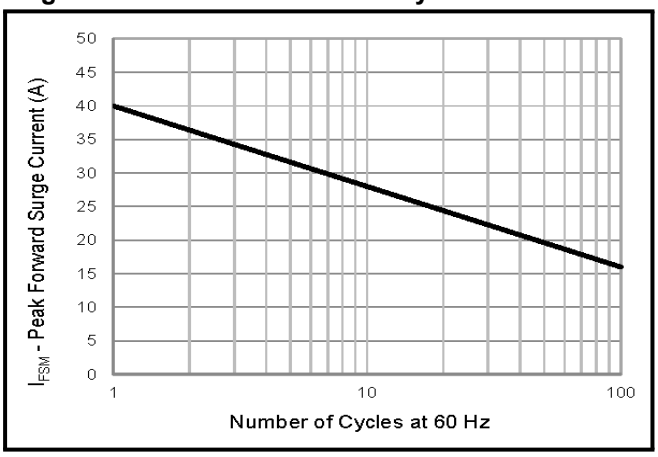

BORN SEMICONDUCTOR , INC. ALL RIGHT RESERVED

Specifications are subject to change without notice.
Please refer to http://*www.born-tw.com* for current information.

P4SMA Series

Transient Voltage Suppressor

Soldering Parameters

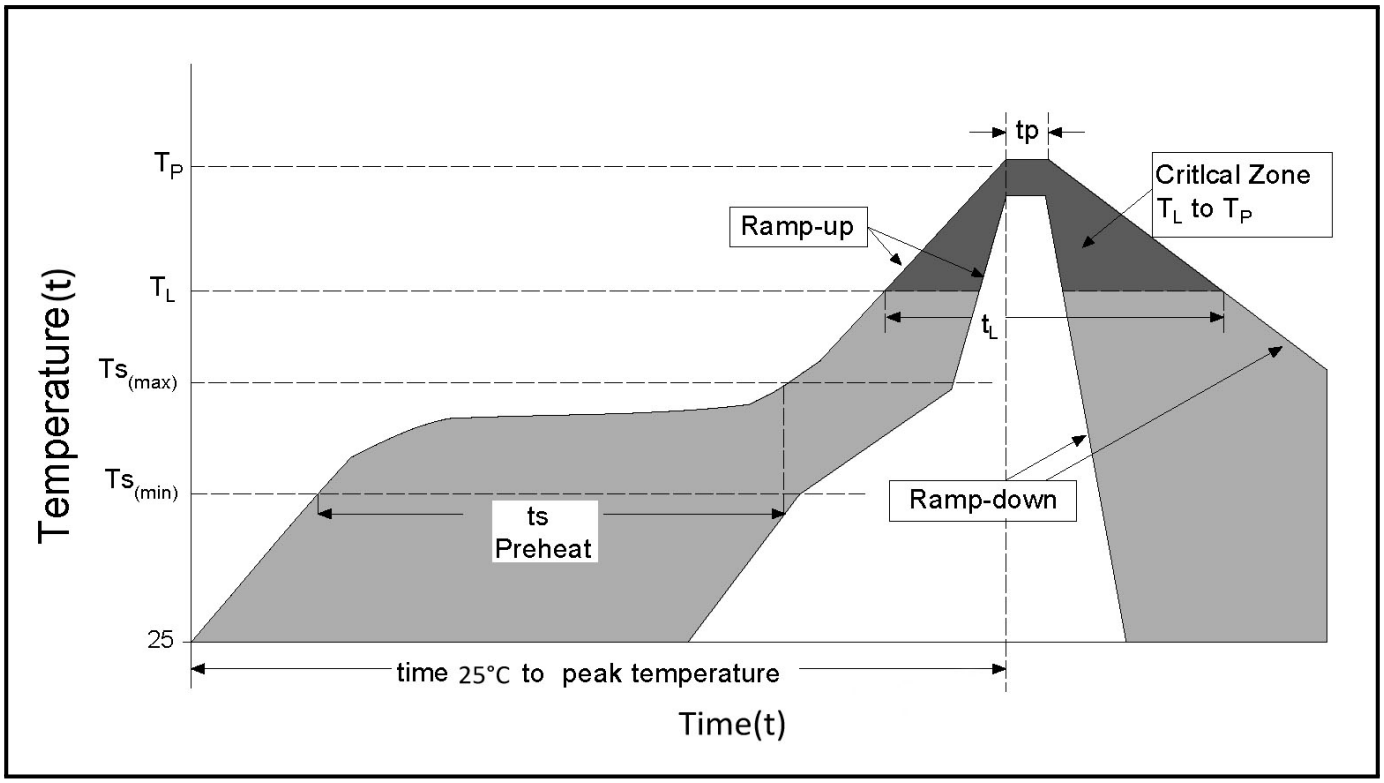

Reflow Condition		Lead-free assembly
Pre Heat	- Temperature Min (T_S(min))	150°C
	- Temperature Max (T_S(max))	200°C
	- Time (min to max) (t_S)	60 - 180 secs
Average ramp up rate (Liquidus Temp (T_L) to peak)		3°C/second max
T_S(max) to T_L - Ramp-up Rate		3°C/second max
Reflow	- Temperature (T_L) (Liquidus)	217°C
	- Time (t_L)	60 -150 secs
Peak Temperature (T_P)		$260^{+0/-5°C}$
Time within 5°C of actual peak Temperature (t_p)		20 - 40 secs
Ramp-down Rate		6°C/second max
Time 25°C to peak Temperature (t)		8 minutes Max.
Do not exceed		260°C

BORN SEMICONDUCTOR , INC. ALL RIGHT RESERVED

Specifications are subject to change without notice.
Please refer to http://*www.born-tw.com* for current information.

P4SMA Series

Transient Voltage Suppressor

Outline Drawing - SMA

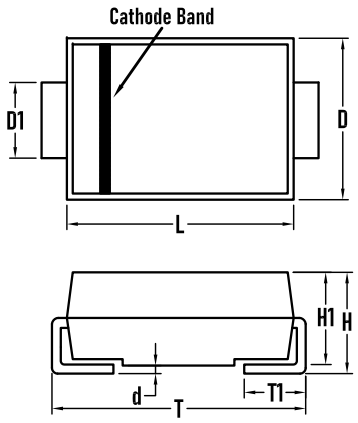

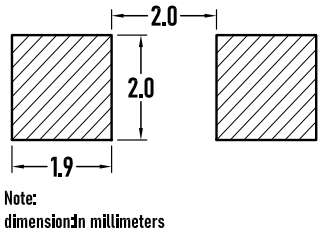

Note:
dimension:In millimeters

SYMBOL	MILLIMETER		Inches	
	MIN	MAX	MIN	MAX
D	2.5	2.9	0.098	0.114
D1	1.2	1.8	0.047	0.071
T	4.8	5.3	0.189	0.209
T1	0.8	1.5	0.031	0.059
d	–	0.2	–	0.008
H1	1.8	2.2	0.071	0.087
H	1.9	2.5	0.075	0.098
L	3.9	4.6	0.154	0.181

Packaging Tape - SMA

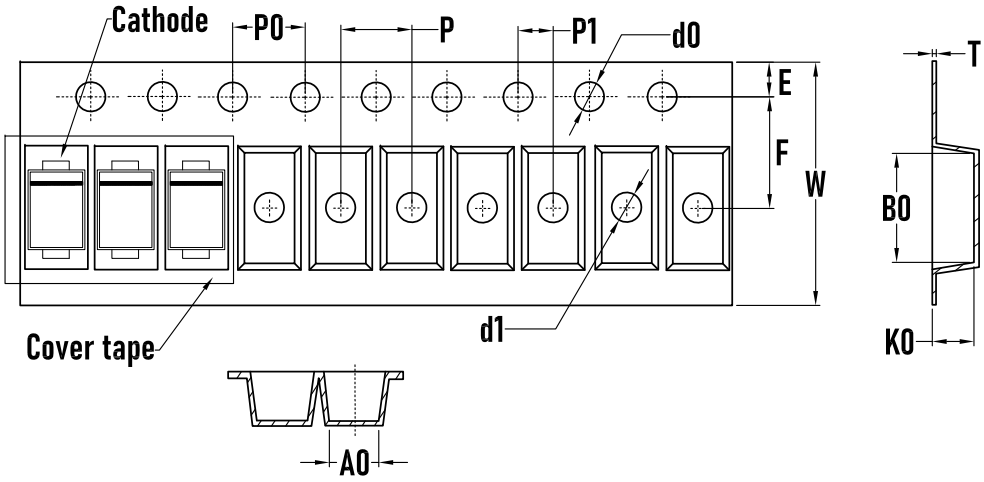

SYMBOL	MILLIMETER
A0	2.70
B0	5.10±0.1
d0	1.50±0.1
d1	1.50±0.1
E	1.75±0.1
F	5.50±0.1
K0	2.40±0.1
P	4.00±0.1
P0	4.00±0.1
P1	2.00±0.1
W	12.00±0.1
T	0.2±0.02

Packaging Reel

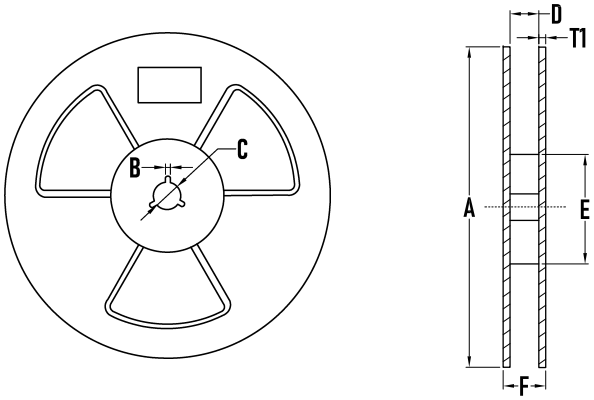

SYMBOL	MILLIMETER
A	323±2
B	3.0±0.2
C	15.0±0.5
D	13±2
E	73±2
T1	2.2±0.2
Quantity	5000PCS

BORN SEMICONDUCTOR , INC. ALL RIGHT RESERVED