DFN2510-10 Plastic-Encapsulate ESD Protection Diodes

Features

- Low leakage current
- Low clamping voltage
- IEC 61000-4-2 (ESD Air): ±20kV
- IEC 61000-4-2 (ESD Contact): ±15kV
- IEC 61000-4-5 (Lightning 8/20μs): 7A

Reverse Working Voltage
3.3V Max.
Ultra Small Capacitance
0.5pF(Max.)

Applications

- Cellular Handsets and Accessories
- Personal Digital Assistants
- Notebooks and Handhelds
- Portable Instrumentation,Digital Cameras
- Peripherals, Audio Players, Industrial Equipment

DFN2510-10

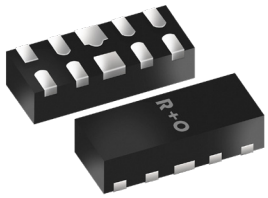

Function Diagram



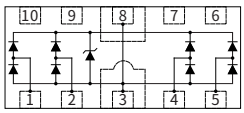

Maximum Ratings (Ta=25°C Unless otherwise specified)

SYMBOL	PARAMETER	CONDITIONS	VALUE	UNIT
V_{ESD}	Electrostatic Discharge Voltage	ESD per IEC 61000-4-2(Air)	±20	KV
		ESD per IEC 61000-4-2(Contact)	±15	KV
P_{PP}	Peak Pulse Power	tp = 8/20 μs	35	W
I_{PP}	Rated Peak Pulse Current	tp = 8/20 μs	7.0	A
T_J	Operating JunctionTemperature Range	—	-40 to +125	°C
T_{STG}	Storage Temperature Range	—	-55 to +150	°C

Electrical Parameter

SYMBOL	PARAMETER
I_{PP}	Peak Pulse Current @8/20μs
V_C	Clamping Voltage @ I_{PP}
I_{BR} / I_T	Test Current
V_{BR}	Breakdown Voltage @ I_T
V_{RWM}	Peak Reverse Working Voltage
I_R	Reverse Leakage Current @ V_{RWM}
I_{TRIG}	Reverse Trigger Current
V_{TRIG}	Reverse Trigger Voltage
I_{HOLD}	Reverse Holding Current
V_{HOLD}	Reverse Holding Voltage
P_{PP}	Peak Pulse Power Dissipation

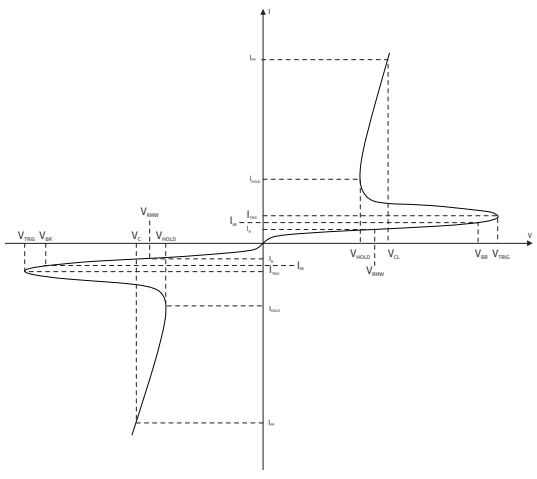

Electrical Characteristics (Ta=25°C Unless otherwise specified)

PARAMETER	SYMBOL	CONDITION	Min	Typ	Max	UNIT
Peak Reverse Working Voltage	V_{RWM}	T_a=25°C	—	—	3.3	V
Breakdown Voltage	V_{BR}	I_T=1mA,T_a=25°C	3.6	—	—	V
Reverse Leakage Current	I_R	V_{RWM}=3.3V,T_a=25°C	—	—	0.1	μA
Dynamic Resistance	R_{DYN}	Z0=50Ω，calculated from 4A to 16A	—	0.25	—	Ω
TLP Clamping Voltage	V_C @TLP	Z0=50Ω,Tp=100ns,Tr=1ns;TLP@16A	—	5.5	—	V
Clamping Voltage	V_C	I_{PP}=7.0A,t_p=8/20μs	—	3.6	5.0	V
Junction Capacitance	C_J	V_{RMW}=1.5V,f=1MHz	—	0.4	0.5	pF

Ratings And Characteristics Curves (Ta=25°C Unless otherwise specified)

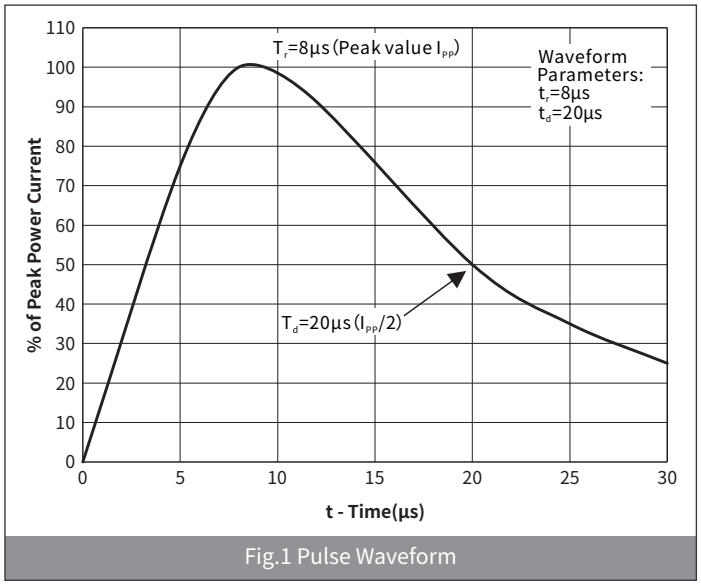

Fig.1 Pulse Waveform

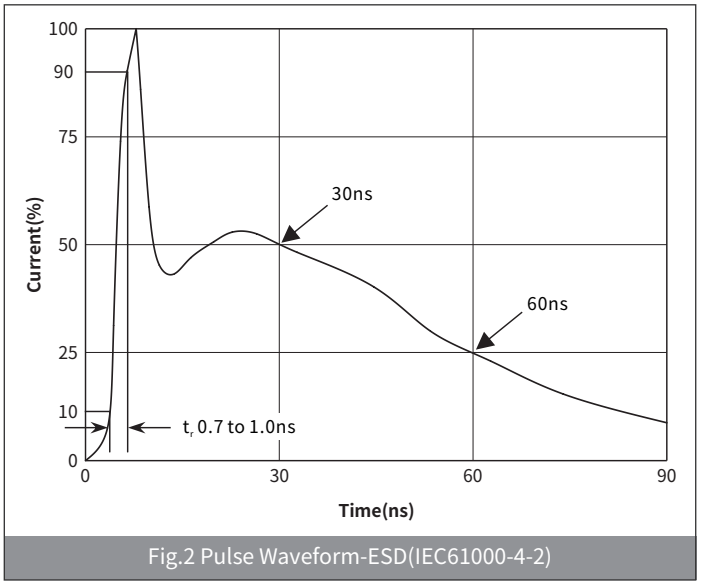

Fig.2 Pulse Waveform-ESD(IEC61000-4-2)

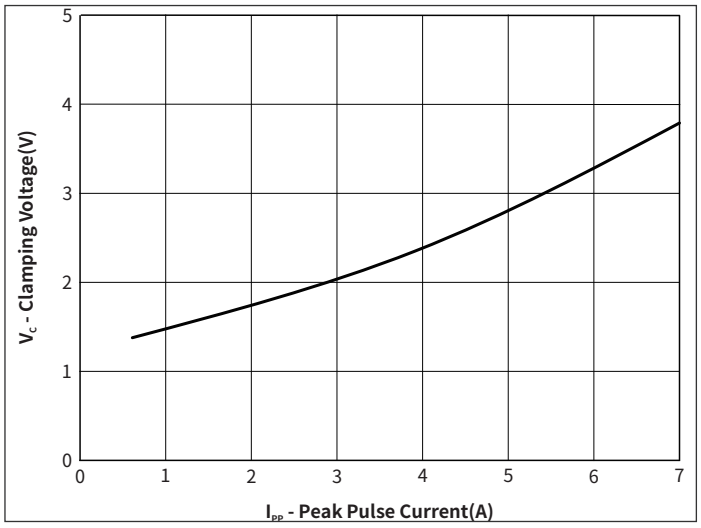

Fig.3 Clamping Voltage vs. Peak Pulse Current

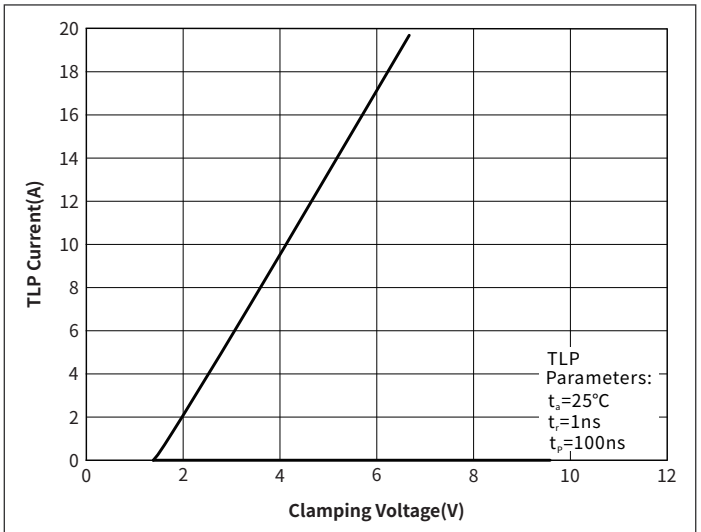

Fig.4 TLP IV Curve (IO to GND)

Ordering Information

PREFERED P/N	PACKAGE	SIZE(mm)	DELIVERY MODE	MPQ(PCS)
H3V3U25BS	DFN2510	2.50×1.00×0.50	7'' REEL	3,000

Recommended Soldering Conditions

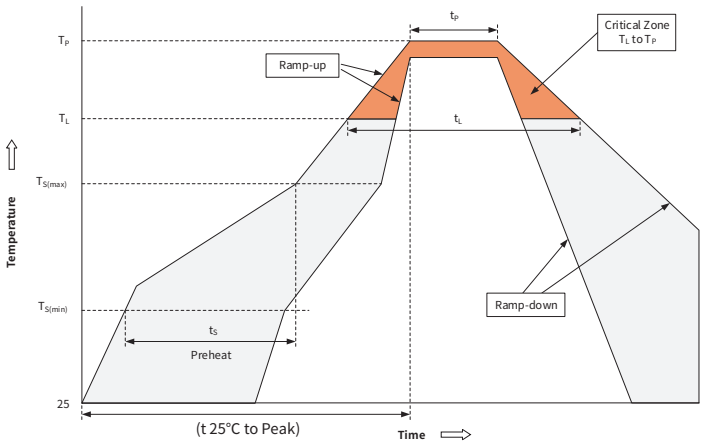

Profile Feature		Pb-Free Assembly
Pre-heat	Temperature Min ($T_{S(min)}$)	+150°C
	Temperature Max($T_{S(max)}$)	+200°C
	Time (Min to Max) (t_s)	60-180 secs.
Average ramp up rate (Liquid us Temp (T_L) to peak)		3°C /sec. Max
$T_{S(max)}$ to T_L - Ramp-up Rate		3°C /sec. Max
Reflow	Temperature(T_L)(Liquid us)	+217°C
	Temperature(t_L)	60-150 secs.
Peak Temp (T_P)		+260(+0/-5)°C
Time within 5°C of actual Peak Temp (t_P)		20-40secs
Ramp-down Rate		6°C /sec. Max
Time 25°C to Peak Temp (T_P)		8 min. Max
Do not exceed		+260°C

Package Outline Dimensions (DFN2510)

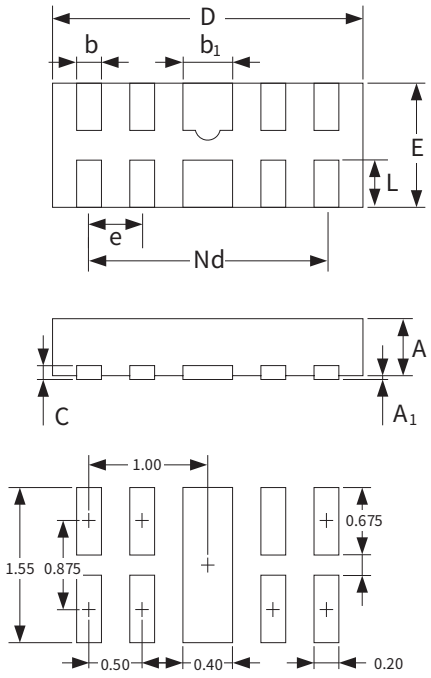

*Size in mm

Symbol	Millimeters(mm)		
	Min.	Type.	Max.
D	2.45	2.50	2.55
E	0.95	1.00	1.05
b_1	0.35	0.40	0.45
b	0.15	0.20	0.25
L	0.33	0.38	0.43
Nd	2.00 BSC		
e	0.50 BSC		
A	0.45	0.50	0.55
c	0.15 REF		
A_1	0.00	-	0.05