产品规格手册

深圳市乾能惠电子有限公司

QN6206

低压差线性稳压器

Low power consumption, Low ESR Cap.Compatible QN6206 Series

General Description

QN6206 series are highly precise, low power consumption, high voltage, positive voltage regulators manufactured using CMOS and laser trimming technologies .The series provides large currents with a significantly small dropout voltage.

The series is compatible with low ESR ceramic capacitors .The current limiter's foldback circuit also operates as a short protect for the output current limiter and the output pin.

Features

- Maximum Output Current: 300mA (V_{IN}=4.3V,V_{OUT}=3.3V)
- Dropout Voltage: 200mV@ I_{OUT} =100mA
- Input Voltage Range: up to 6.0V
- Highly Accuracy: ±2%
- Low Power Consumption: 8uA（TYP.）
- EQNellent Input Stability
- Be available to regulator and reference voltage

Typical Application

- Mobile phones
- communication equipment
- Portable games
- Cameras, Video systems
- Reference voltage sources
- Battery powered equipment

Package

- 3-pin SOT89-3，SOT23-3，TO92，SOT23

Typical Application Circuit

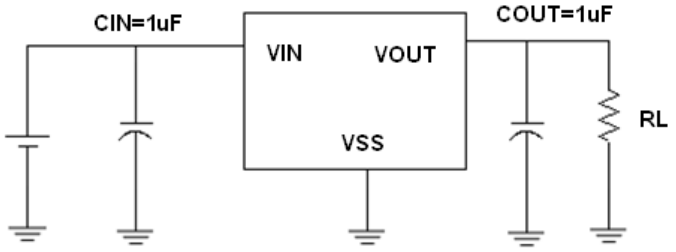

Pin Configuration

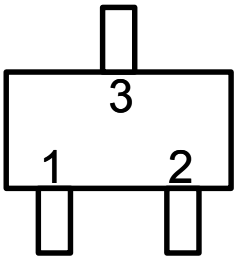

SOT23/SOT23-3

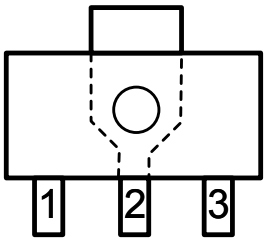

SOT89-3

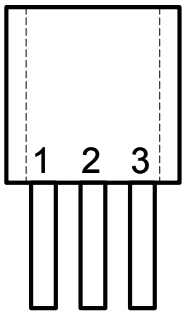

TO92

Pin Assignment

QN6206Axx/ QN6206Pxx

Pin					**Name**	**Function**
M3	PG	PR	MR	T		
SOT23-3	SOT89-3	SOT89-3	SOT23	TO-92		
1	1	2	1	1	VSS	Ground
2	3	1	2	3	VOUT	Output
3	2	3	3	2	VIN	Input

The difference of printing on the chip between P and P1 is : P: 6206A P1: 6206A1

Block Diagram

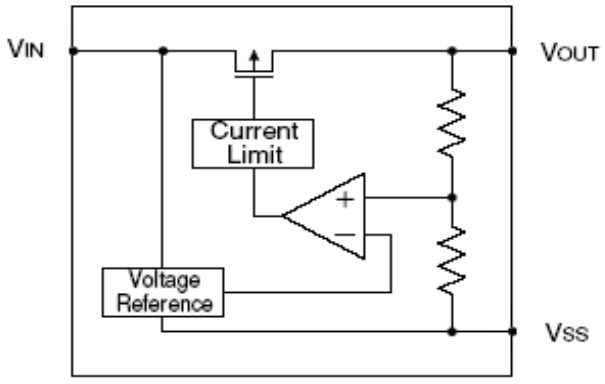

Selection Guide

product series	Output voltage	Supply Current	Package
QN6206PXXXPR	1.5-5V	8uA	SOT89-3
QN6206XXXMR	1.5-5V	8uA	SOT23
QN6206XXXG	1.5-5V	8uA	SOT23
QN6206XXTG	1.5-5V	8uA	TO92
QN6206XXM3G	1.5-5V	8uA	SOT23-3
QN6206KXXM3G	1.5-5V	180uA	SOT23-3

NOTE: At present ,there are ten kinds of voltage value：
1.5V、1.8V、2.0V、2.1V、2.5V、2.7V、2.8V、3.0V、3.3V、3.6V、5.0V。
If you need other voltage and package, please contact our sales sta ff。

型号选择说明：PXXX一第1个"X"封装形式,PR、MR、P;第2个"XX"输出电压值.如:

QN6206P302PR,就是3.0V输出电压,SOT89-3封装.QN6206P302MR,就是3.0V输入电压，SOT23封装

Absolute Maximum Ratings

Parameter		Symbol	Description	Units
Input Voltage		V_{IN}	6.5	V
Output Current		I_{out}	500	mA
Output Voltage		V_{out}	Vss-0.3 ~ Vout+0.3	V
Power Dissipation	SOT23-3	Pd	300	mW
	SOT89-3	Pd	500	mW
	SOT23	Pd	300	mW
	TO-92	Pd	500	mW
Operating Ambient Temperature		T_{Opr}	-25 ~ +125	℃
Storage Temperature		T_{stg}	-40 ~ +125	℃

QN6206A15

(VIN=Vout+1V,Cin=Cout=1uF,Ta=25^{0}C Unless otherwise stated)

PARAMETER	SYMBOL	CONDITION	MIX	TYP	MAX	UNIT
Output Voltage	V_{OUT}(E) (Note 2)	I_{OUT}=10mA, V_{IN}=Vout+1V	X 0.98	V_{OUT}(T) (Note 1)	X 1.02	V
Input Voltage	V_{IN}				6	V
Maximum Output Current	I_{OUT} (max)	V_{IN}=Vout+1V		100		mA
Load Regulation	ΔV_{OUT}	V_{IN}=Vout+1V, 1mA≤I_{OUT}≤80mA		10	20	mV
Dropout Voltage (Note 3)	V_{dif1}	I_{OUT} =20mA		180	200	mV
	V_{dif2}	I_{OUT} =50mA		360	380	mV
Supply Current	I_{SS}	V_{IN}=Vout+1V		7	15	μA
Line Regulations	$\frac{\Delta V_{OUT}}{\Delta V_{IN} \bullet V_{OUT}}$	I_{OUT} =10mA Vout+1V ≤V_{IN}≤5V		0.1	0.2	%/V
Power Supply Ripple Rejection Ratio	PSRR	Vin= [Vout+1]V +1Vp-pAC I_{OUT} =10mA,f=1kHz		45	47	dB
Short Circuit Current	I_{short}	Vin=Vout(T)+1.5V Vout=Vss		20	50	mA
Over Current Protection	I_{limit}			300		mA

QN6206A18

(VIN=Vout+1V,Cin=Cout=1uF,Ta=25°C Unless otherwise stated)

PARAMETER	SYMBOL	CONDITION	MIX	TYP	MAX	UNIT
Output Voltage	V_{OUT}(E) (Note 2)	I_{OUT}=10mA, V_{IN}=Vout+1V	X 0.98	V_{OUT}(T) (Note 1)	X 1.02	V
Input Voltage	V_{IN}				6	V
Maximum Output Current	I_{OUT} (max)	V_{IN}=Vout+1V		120		mA
Load Regulation	ΔV_{OUT}	V_{IN}=Vout+1V, 1mA≤I_{OUT}≤80mA		12	27	mV
Dropout Voltage (Note 3)	V_{dif1}	I_{OUT} =20mA		180	200	mV
	V_{dif2}	I_{OUT} =50mA		360	380	mV
Supply Current	I_{SS}	V_{IN}=Vout+1V		7	15	μA
Line Regulations	$\frac{\Delta V_{OUT}}{\Delta V_{IN} \bullet V_{OUT}}$	I_{OUT} =10mA Vout+1V ≤V_{IN}≤5V		0.1	0.2	%/V
Power Supply Ripple Rejection Ratio	PSRR	Vin= [Vout+1]V +1Vp-pAC I_{OUT} =10mA,f=1kHz		45	47	dB
Short Circuit Current	I_{short}	Vin=Vout(T)+1.5V Vout=Vss		25	50	mA
Over Current Protection	I_{limit}			400		mA

QN6206A21

(VIN=Vout+1V,Cin=Cout=1uF,Ta=25^{0}C Unless otherwise stated)

PARAMETER	SYMBOL	CONDITION	MIX	TYP	MAX	UNIT
Output Voltage	V_{OUT}(E) (Note 2)	I_{OUT}=10mA, V_{IN}=Vout+1V	X 0.98	V_{OUT}(T) (Note 1)	X 1.02	V
Input Voltage	V_{IN}				6	V
Maximum Output Current	I_{OUT} (max)	V_{IN}=Vout+1V		200		mA
Load Regulation	ΔV_{OUT}	V_{IN}=Vout+1V, 1mA≤I_{OUT}≤80mA		10	20	mV
Dropout Voltage (Note 3)	V_{dif1}	I_{OUT} =50mA		100	130	mV
	V_{dif2}	I_{OUT} =100mA		200	230	mV
Supply Current	I_{SS}	V_{IN}=Vout+1V		7	15	μA
Line Regulations	$\frac{\Delta V_{OUT}}{\Delta V_{IN} \bullet V_{OUT}}$	I_{OUT} =10mA Vout+1V ≤V_{IN}≤5V		0.1	0.2	%/V
Power Supply Ripple Rejection Ratio	PSRR	Vin= [Vout+1]V +1Vp-pAC I_{OUT} =10mA,f=1kHz		45	47	dB
Short Circuit Current	I_{short}	Vin=Vout(T)+1.5V Vout=Vss		20	50	mA
Over Current Protection	I_{limit}			450		mA

QN6206A28

(VIN=Vout+1V,Cin=Cout=1uF,Ta=25°C Unless otherwise stated)

PARAMETER	SYMBOL	CONDITION	MIX	TYP	MAX	UNIT
Output Voltage	$V_{OUT}(E)$ (Note 2)	I_{OUT}=10mA, V_{IN}=Vout+1V	X 0.98	$V_{OUT}(T)$ (Note 1)	X 1.02	V
Input Voltage	V_{IN}				6	V
Maximum Output Current	I_{OUT} (max)	V_{IN}=Vout+1V		300		mA
Load Regulation	ΔV_{OUT}	V_{IN}=Vout+1V 1mA≤I_{OUT}≤100mA		14	28	mV
Dropout Voltage (Note 3)	V_{dif1}	I_{OUT} =80mA		180	200	mV
	V_{dif2}	I_{OUT} =200mA		380	400	mV
Supply Current	I_{SS}	V_{IN}=Vout+1V		8	15	μA
Line Regulations	$\frac{\Delta V_{OUT}}{\Delta V_{IN} \bullet V_{OUT}}$	I_{OUT} =10mA Vout+1V ≤V_{IN}≤6V		0.03	0.2	%/V
Power Supply Ripple Rejection Ratio	PSRR	Vin= [Vout+1]V +1Vp-pAC I_{OUT} =10mA,f=1kHz		50	52	dB
Short Circuit Current	I_{short}	Vin=Vout(T)+1.5V Vout=Vss		30	60	mA
Over Current Protection	I_{limit}			500		mA

QN6206A30

(VIN=Vout+1V,Cin=Cout=1uF,Ta=25^{0}C Unless otherwise stated)

PARAMETER	SYMBOL	CONDITION	MIX	TYP	MAX	UNIT
Output Voltage	$V_{OUT}(E)$ (Note 2)	I_{OUT}=10mA, V_{IN}=Vout+1V	X 0.98	$V_{OUT}(T)$ (Note 1)	X 1.02	V
Input Voltage	V_{IN}				6	V
Maximum Output Current	I_{OUT} (max)	V_{IN}=Vout+1V		300		mA
Load Regulation	ΔV_{OUT}	V_{IN}=Vout+1V 1mA≤I_{OUT}≤100mA		14	28	mV
Dropout Voltage (Note 3)	V_{dif1}	I_{OUT} =80mA		180		mV
	V_{dif2}	I_{OUT} =200mA		380		mV
Supply Current	I_{SS}	V_{IN}=Vout+1V		8	15	μA
Line Regulations	$\frac{\Delta V_{OUT}}{\Delta V_{IN} \bullet V_{OUT}}$	I_{OUT} =10mA Vout+1V ≤V_{IN}≤6V		0.03	0.2	%/V
Power Supply Ripple Rejection Ratio	PSRR	Vin= [Vout+1]V +1Vp-pAC I_{OUT} =10mA,f=1kHz		50	52	dB
Short Circuit Current	I_{short}	Vin=Vout(T)+1.5V Vout=Vss		30	60	mA
Over Current Protection	I_{limit}			500		mA

QN6206A33

(VIN=Vout+1V,Cin=Cout=1uF,Ta=25°C Unless otherwise stated)

PARAMETER	SYMBOL	CONDITION	MIX	TYP	MAX	UNIT
Output Voltage	$V_{OUT}(E)$ (Note 2)	I_{OUT}=10mA, V_{IN}=Vout+1V	X 0.98	$V_{OUT}(T)$ (Note 1)	X 1.02	V
Input Voltage	V_{IN}				6	V
Maximum Output Current	I_{OUT} (max)	V_{IN}=Vout+1V		300		mA
Load Regulation	ΔV_{OUT}	V_{IN}=Vout+1V 1mA≤I_{OUT}≤100mA		14	28	mV
Dropout Voltage (Note 3)	V_{dif1}	I_{OUT} =80mA		180	200	mV
	V_{dif2}	I_{OUT} =200mA		380	400	mV
Supply Current	I_{SS}	V_{IN}=Vout+1V		9	15	μA
Line Regulations	$\frac{\Delta V_{OUT}}{\Delta V_{IN} \bullet V_{OUT}}$	I_{OUT} =10mA Vout+1V ≤V_{IN}≤6V		0.03	0.2	%/V
Power Supply Ripple Rejection Ratio	PSRR	Vin= [Vout+1]V +1Vp-pAC I_{OUT} =10mA,f=1kHz		50	52	dB
Short Circuit Current	I_{short}	Vin=Vout(T)+1.5V Vout=Vss		30	60	mA
Over Current Protection	I_{limit}			500		mA

QN6206K33

(VIN=Vout+1V,Cin=Cout=1uF,Ta=25°C Unless otherwise stated)

PARAMETER	SYMBOL	CONDITION	MIX	TYP	MAX	UNIT
Output Voltage	$V_{OUT}(E)$ (Note 2)	I_{OUT}=10mA, V_{IN}=Vout+1V	X 0.98	$V_{OUT}(T)$ (Note 1)	X 1.02	V
Input Voltage	V_{IN}				6	V
Maximum Output Current	I_{OUT} (max)	V_{IN}=Vout+1V		300		mA
Load Regulation	ΔV_{OUT}	V_{IN}=Vout+1V 1mA≤I_{OUT}≤100mA		14	28	mV
Dropout Voltage (Note 3)	V_{dif1}	I_{OUT} =80mA		180	200	mV
	V_{dif2}	I_{OUT} =200mA		380	400	mV
Supply Current	I_{SS}	V_{IN}=Vout+1V		180	500	μA
Line Regulations	$\frac{\Delta V_{OUT}}{\Delta V_{IN} \bullet V_{OUT}}$	I_{OUT} =10mA Vout+1V ≤V_{IN}≤6V		0.03	0.2	%/V
Power Supply Ripple Rejection Ratio	PSRR	Vin= [Vout+1]V +1Vp-pAC I_{OUT} =10mA,f=1kHz		50	52	dB
Short Circuit Current	I_{short}	Vin=Vout(T)+1.5V Vout=Vss		30	60	mA
Over Current Protection	I_{limit}			500		mA

Note :

1. V_{OUT} (T) ： Specified Output Voltage

2.V_{OUT} (E) ： Effective Output Voltage (Ie. The output voltage when "V_{OUT} (T)+1.0V"is provided at the Vin pin while maintaining a certain Iout value.)

3.V_{dif} ： V_{IN1} –V_{OUT} (E)'

V_{IN1} ： The input voltage when V_{OUT}(E)' appears as input voltage is gradually decreased.

V_{OUT} (E)'=A voltage equal to 98% of the output voltage whenever an amply stabilized Iout {V_{OUT} (T)+1.0V} is input.

Type Characteristics

（1） Output Current VS. Output Voltage（VIN=Vout+1, **Ta = 25 °C**）

QN6206A18PG

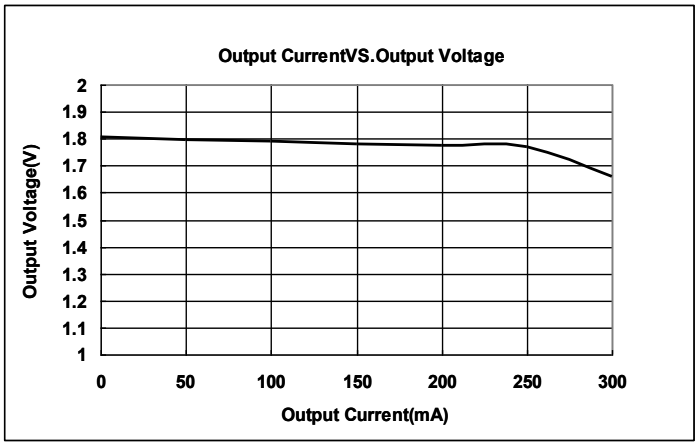

QN6206A21M3G

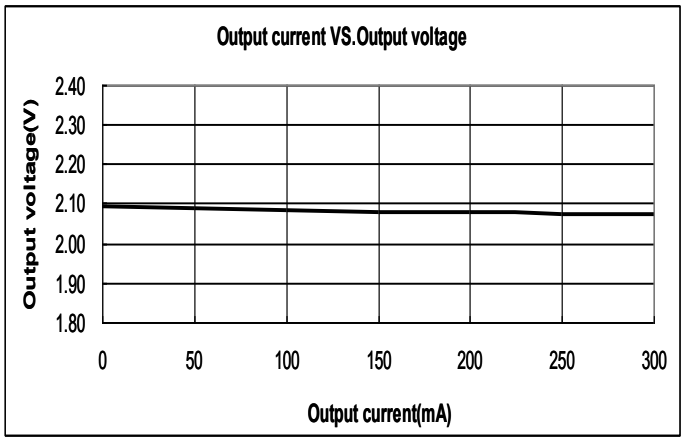

QN6206A28PG

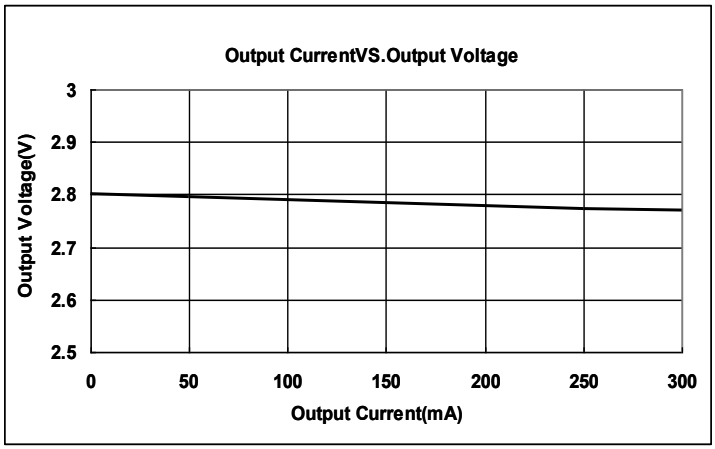

QN6206A30PG

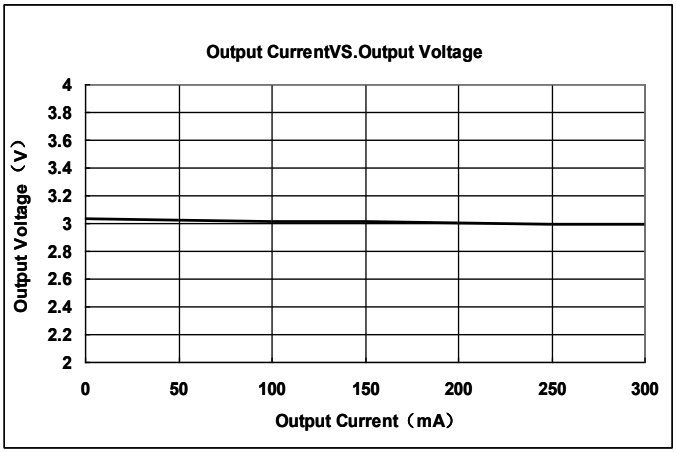

QN6206A33PG

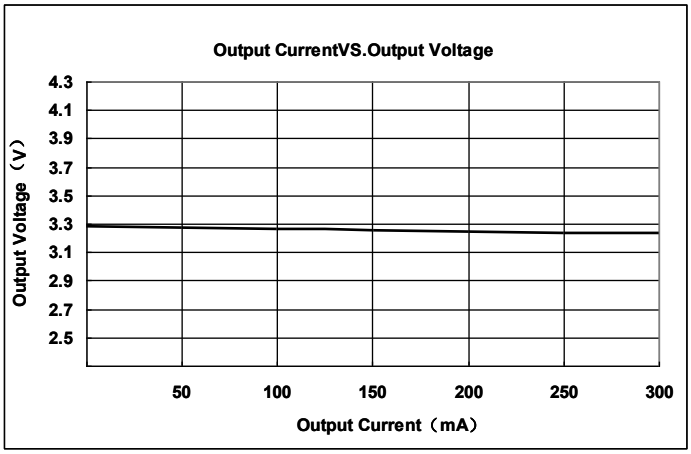

（2）Input Voltage VS. Output Voltage（**Ta = 25 °C**）

QN6206A18PG

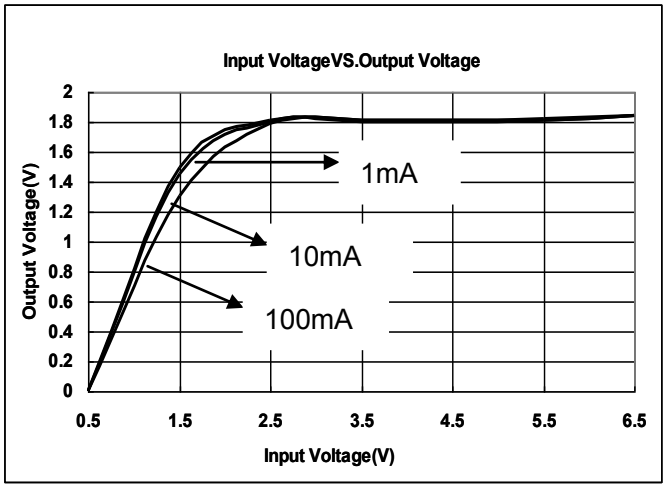

QN6206A21M3G

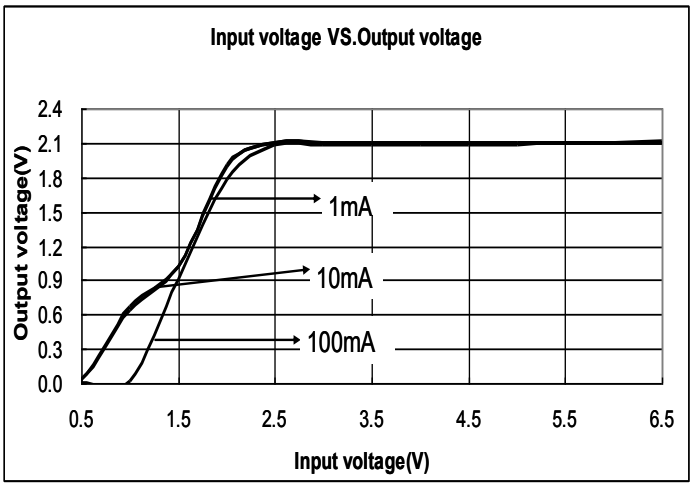

QN6206A28PG

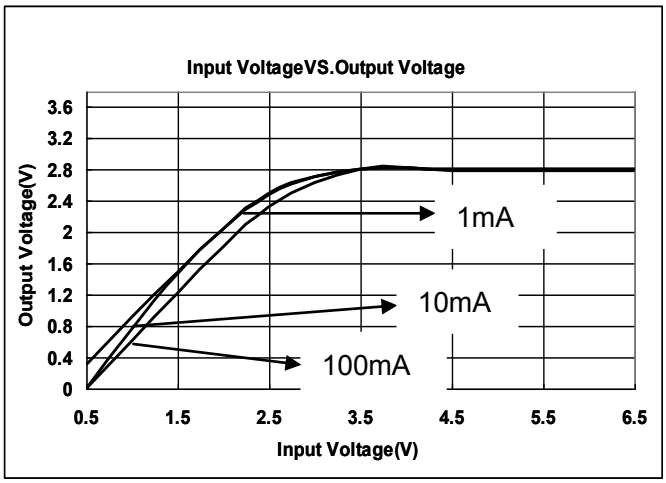

QN6206A30PG

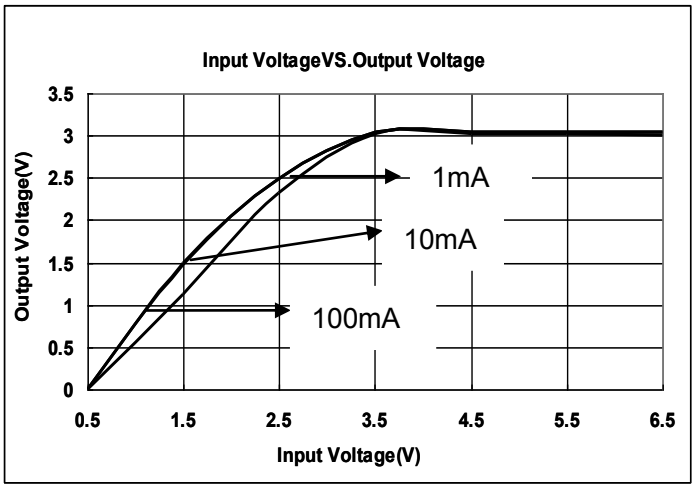

QN6206A33PG

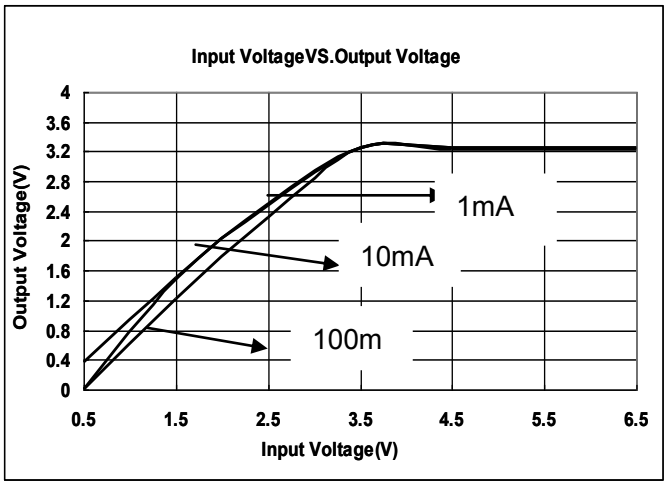

（3）Output Current VS. Dropout Voltage（VIN=Vout+1V,**Ta = 25 °C**）

QN6206A18PG

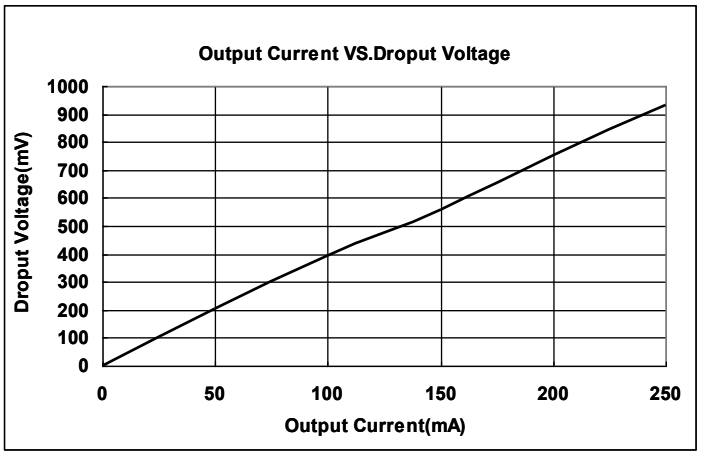

QN6206A21M3G

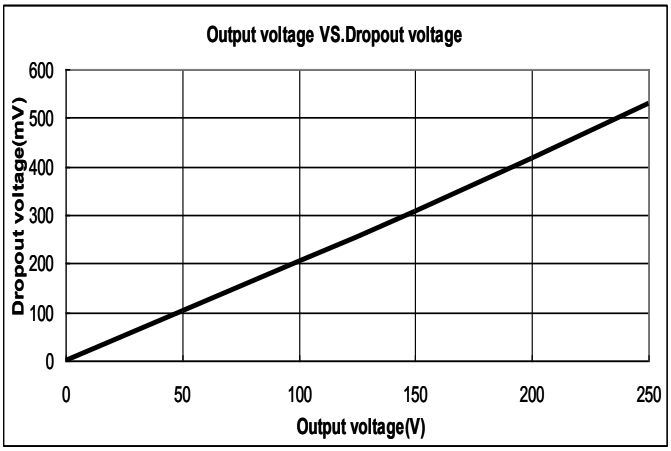

QN6206A28PG

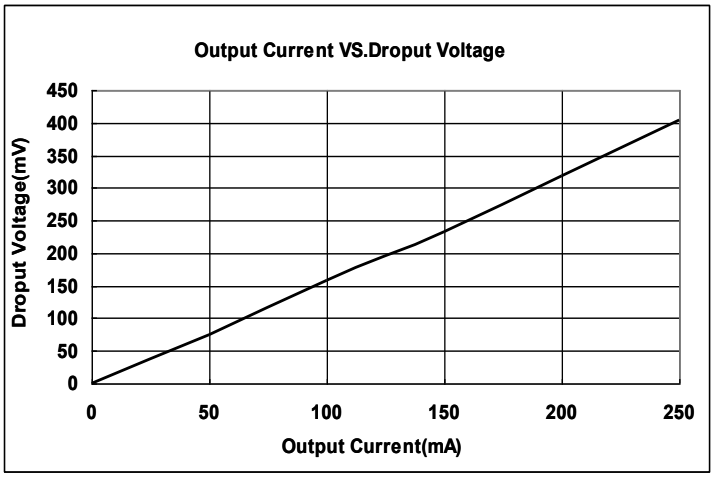

QN6206A30PG

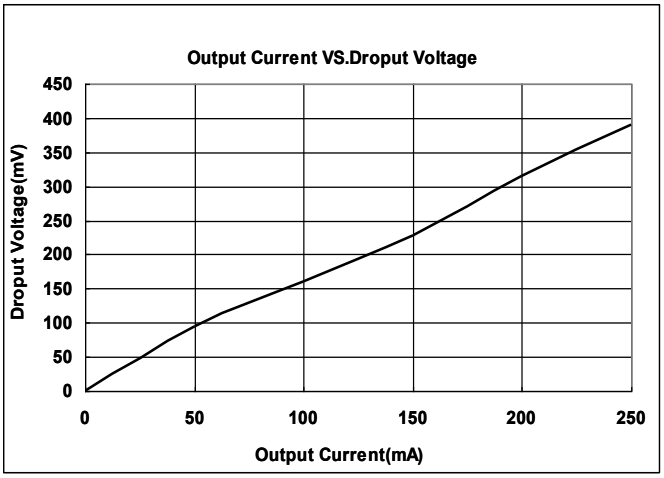

QN6206A33PG

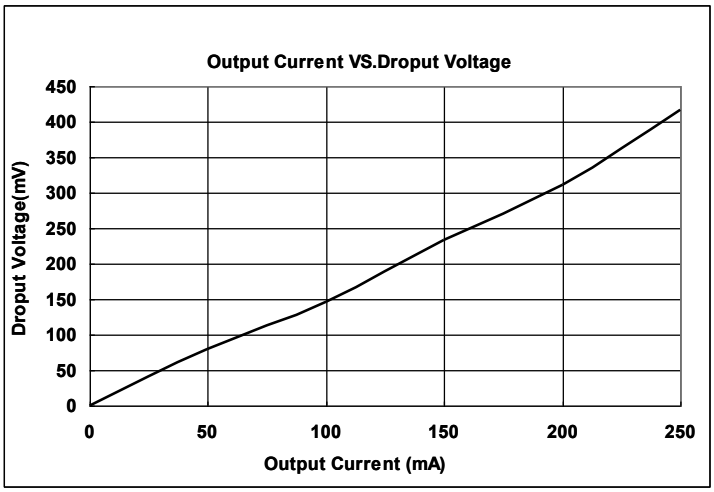

（4）Input Voltage VS. Supply Current（**Ta = 25 °C**）

QN6206A18PG

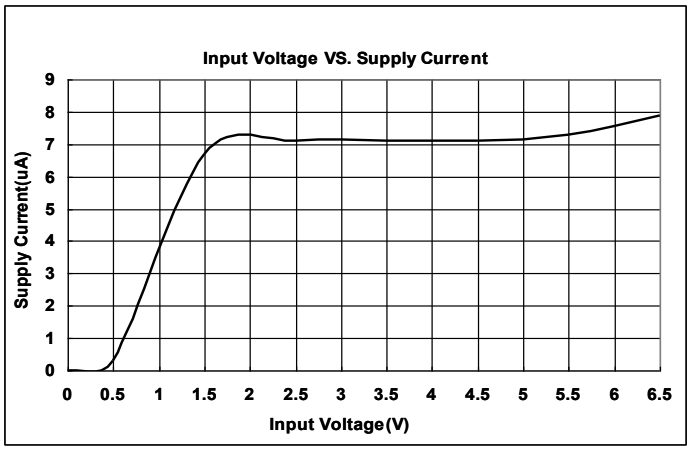

QN6206A21M3G

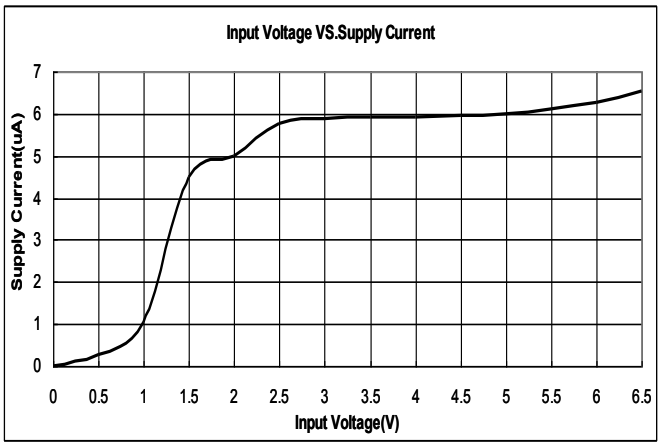

QN6206A28PG

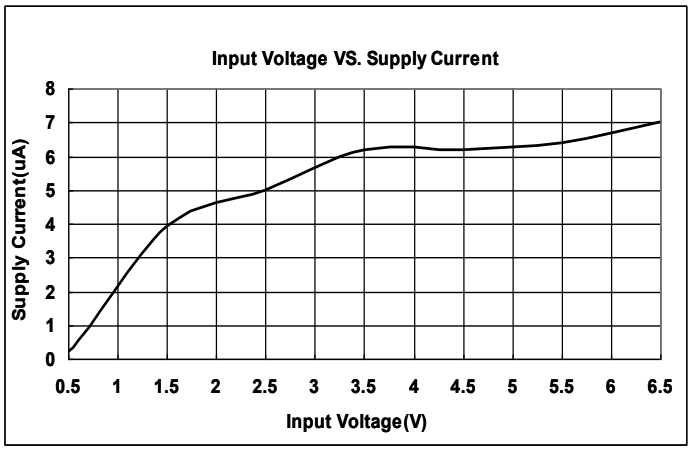

QN6206A30PG

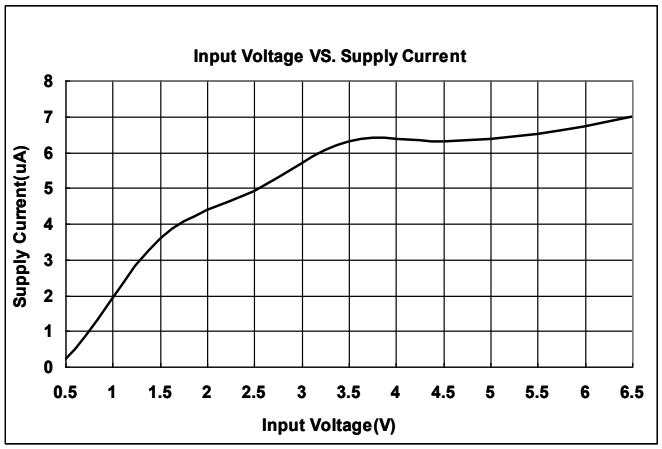

QN6206A33PG

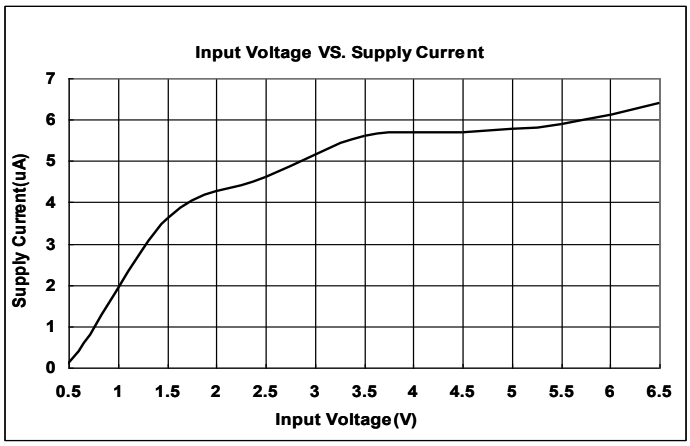

● SOT23

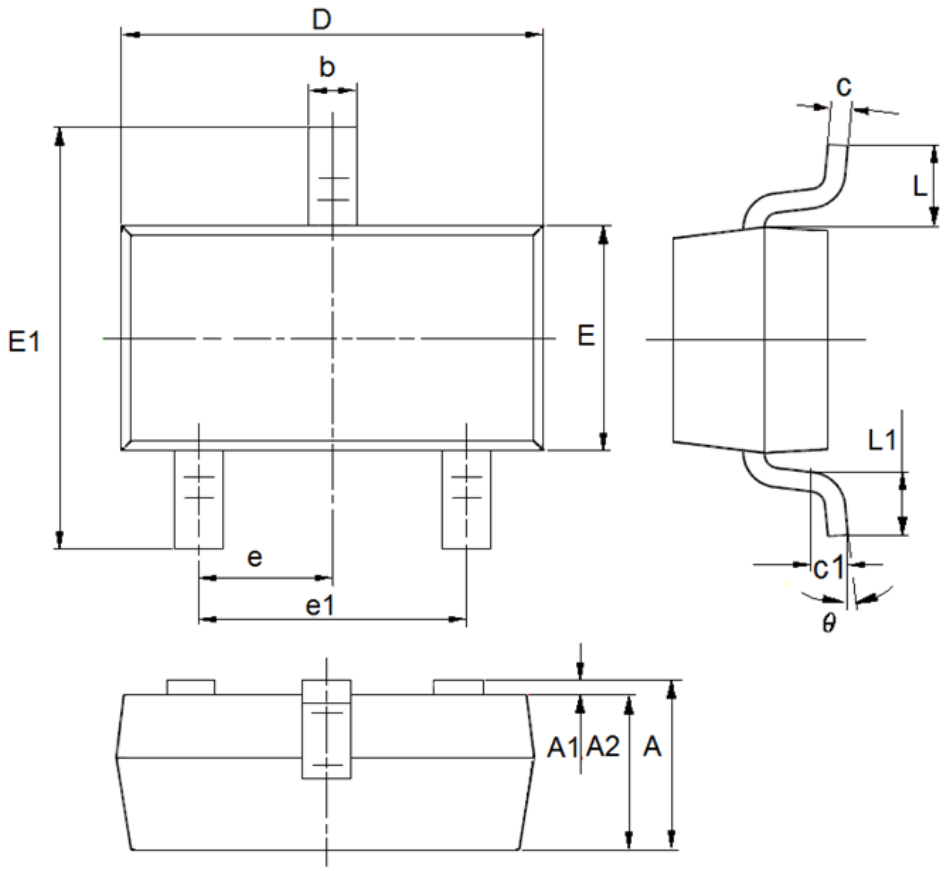

DIM	Millimeters		Inches	
	Min	Max	Min	Max
A	0.9	1.15	0.0354	0.0453
A1	0	0.14	0	0.0055
A2	0.9	1.05	0.0354	0.0413
b	0.28	0.52	0.011	0.0205
c	0.07	0.23	0.0028	0.0091
D	2.8	3	0.1102	0.1181
e1	1.8	2	0.0709	0.0787
E	1.2	1.4	0.0472	0.0551
E1	2.25	2.55	0.0886	0.1004
e	0.95(TYP)		0.0374(TYP)	
L	0.55(TYP)		0.0217(TYP)	
L1	0.25	0.55	0.0098	0.0217
θ	0	8°	0	8°
c1	0.25(TYP)		0.0098(TYP)	

Packaging Information

- SOT23-3

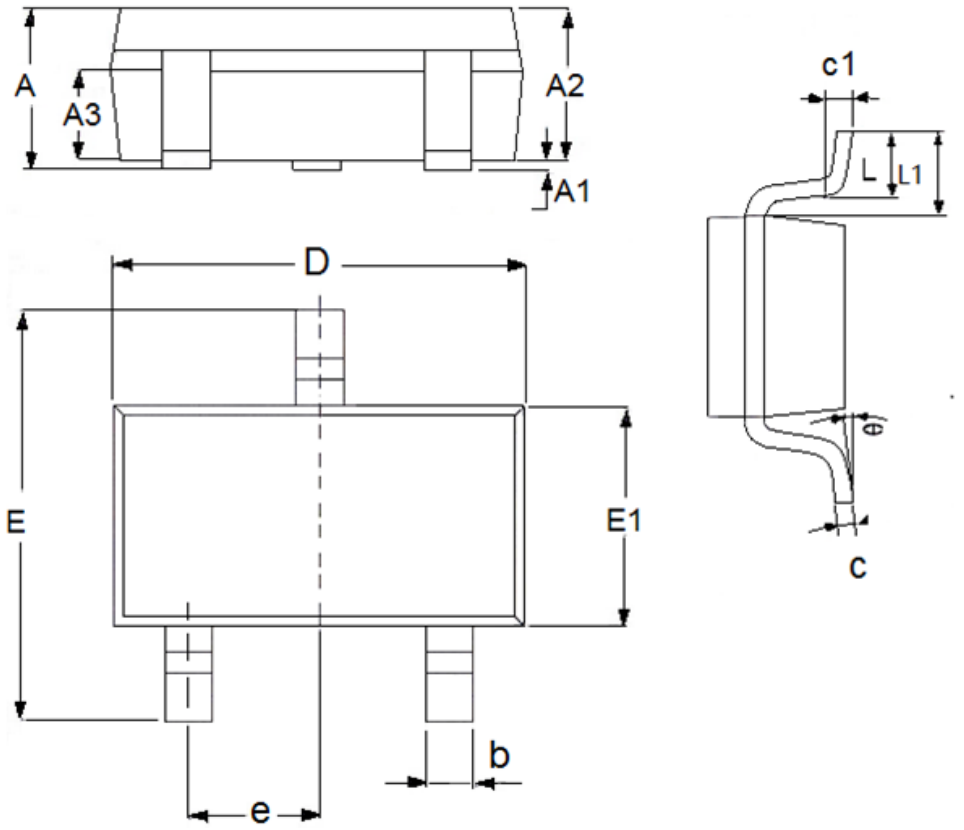

DIM	Millimeters		Inches	
	Min	Max	Min	Max
A	1	1.5	0.0394	0.0591
A1	0	0.15	0	0.0059
A2	0.9	1.3	0.0354	0.0512
A3	0.6	0.7	0.0236	0.0276
b	0.25	0.5	0.0098	0.0197
c	0.1	0.25	0.0039	0.0098
D	2.8	3.1	0.1102	0.122
E	2.6	3.1	0.1023	0.122
E1	1.5	1.8	0.0591	0.0709
e	0.95(TYP)		0.0374(TYP)	
L	0.25	0.6	0.0098	0.0236
L1	0.59(TYP)		0.0232(TYP)	
θ	0	8°	0	8°
c1	0.2(TYP)		0.0079(TYP)	

● SOT89-3

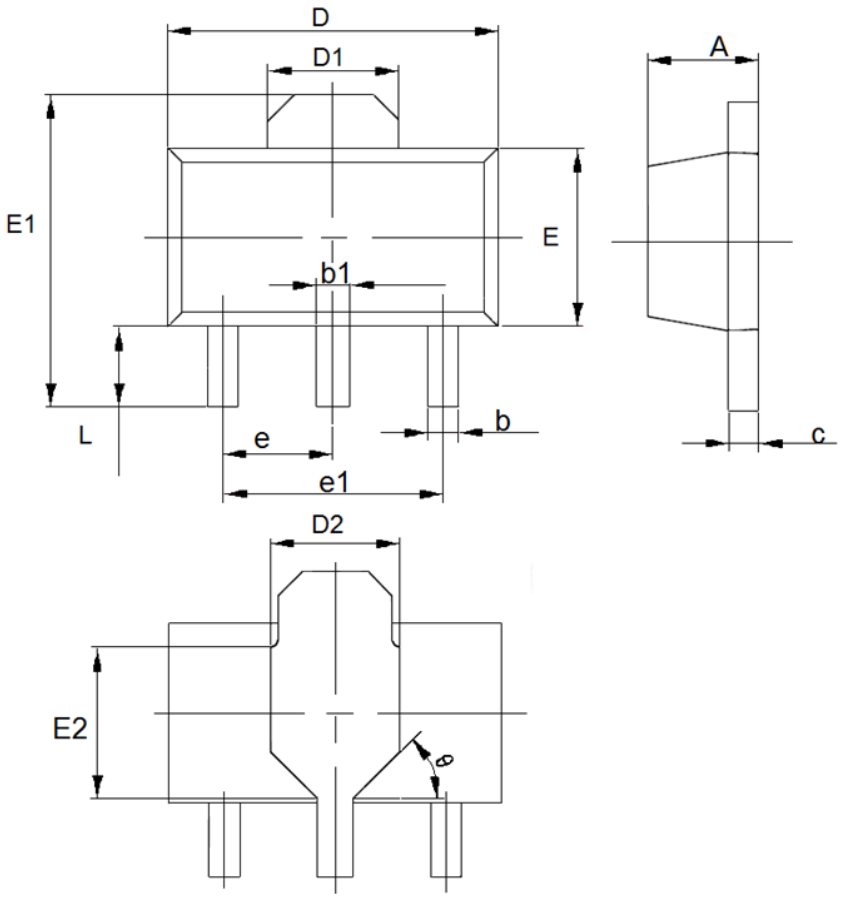

DIM	Millimeters		Inches	
	Min	Max	Min	Max
A	1.4	1.6	0.0551	0.063
b	0.32	0.52	0.0126	0.0205
b1	0.4	0.58	0.0157	0.0228
c	0.35	0.45	0.0138	0.01772
D	4.4	4.6	0.1732	0.1811
D1	1.55(TYP)		0.061(TYP)	
D2	1.75(TYP)		0.0689(TYP)	
e1	3(TYP)		0.1181(TYP)	
E	2.3	2.6	0.0906	0.1023
E1	3.94	4.4	0.1551	0.1732
E2	1.9(TYP)		0.0748(TYP)	
e	1.5(TYP)		0.0591(TYP)	
L	0.8	1.2	0.0315	0.0472
θ	45°		45°	

- TO92

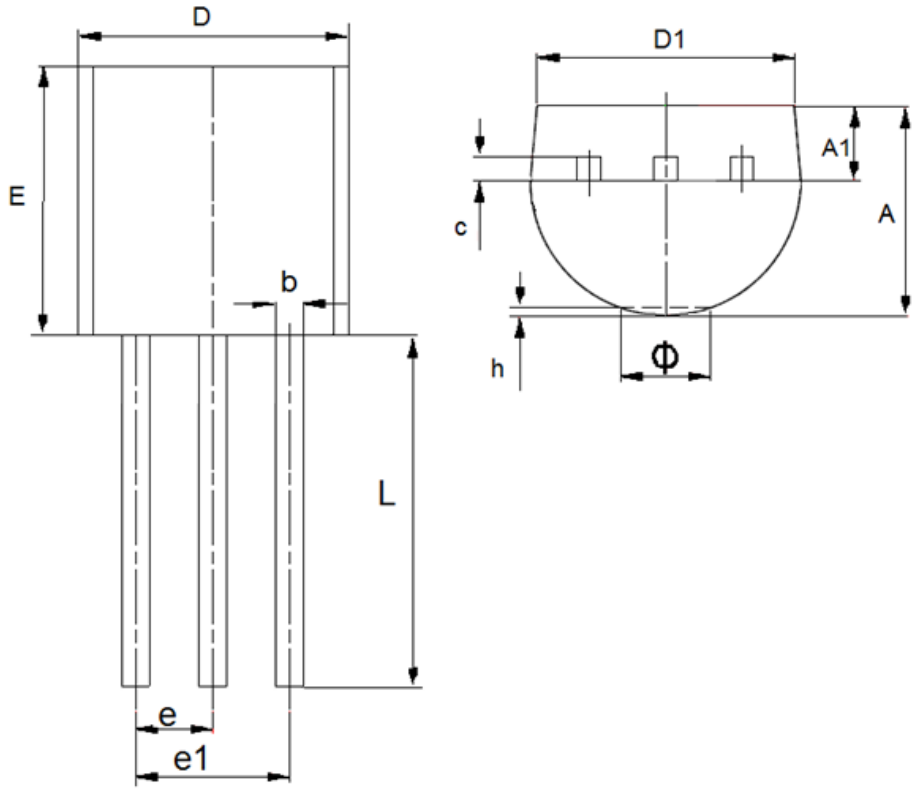

DIM	Millimeters		Inches	
	Min	Max	Min	Max
A	3.3	3.7	0.1299	0.1457
A1	1.1	1.4	0.0433	0.0551
b	0.38	0.55	0.015	0.0217
c	0.36	0.51	0.0142	0.0201
D	4.3	4.7	0.1693	0.185
D1	3.43	—	0.135	—
E	4.3	4.7	0.1693	0.185
e	1.27		0.05	
e1	2.44	2.64	0.0961	0.1039
L	14.1	14.5	0.5551	0.5709
h	0	0.38	0	0.015
Φ	—	1.6	—	0.063